Parts Manual

Model: 1560

Covers Serial Number Range:

603-W-56TCG9Y2-04603 through _____

Sold & Serviced By:

Contents

1 Quick Order List 5
2 Hoppers Push Bean and Sight Gauge 6
2.1 Hoppers and Front Plastic 6
2.2 Push Beam Assembly 8
2.3 Sight Gauge Assembly 10
3 Main Tractor 12
3.1 Engine Compartment 12
3.2 Hood Assembly 14
4 Dash/Controls 16
4.1 Left Side Controls 16
4.2 Right Side Controls 18
4.3 Dash Steering Controls 20
5 Engine Assembly 22
5.1 Engine 22
5.2 Engine Cooling Package 24
6 Hydraulic Oil Tank (SN# 427-V through 052-Y) 26
6.1 Hydraulic Oil Tank (SN# 064-Y through Current) 28
7 Fuel Tank 30
8 Wash Down Tank 32
9 Flight Chain Deck 34
9.1 Flight Chains and Deck 34
9.2 Flight Chain Idler Assembly 36
9.3 Flight Chain Drive Assembly 38
10 Track Drive Assemblies 40
10.1 Left Hand Track Drive 40
10.2 Right Track Drive 42
11 Tow Arms 44
11.1 Tow Arm Weldments 44
11.2 Tow Arm Depth Adjustment Assembly 46
11.3 Tow Arm Match Height Adjustment 48

12 Main Screed 50
12.1 Screed Top Covers.....50
12.2 Screed Bottom Wear Plate Assembly 52
12.3 Left Hand Screed Tower Assembly 54
12.4 Right Hand Screed Tower Assembly.....56
13 Screed Heat Control Box 58
13.1 Screed Heat Control Box.....60
14 Upper Auger Assembly 62
15 Screed Extensions 64
15.1 Left Extension Assembly 64
15.2 Right Extension Assembly.....66
15.3 Left Hand Endgate Assembly 68
15.4 Right Hand Endgate Assembly.....70
15.5 Right Hand Heated Endgate Assembly.....72
15.6 Left Hand Heated Endgate Assembly 74
15.7 End Gate Vertical Assembly.....76
15.8 End Gate Assemblies (SN 017-Y and newer).....78
15.8.1 Right Hand End Gate Assembly.....78
15.8.2 Left Hand End Gate Assembly 80
15.8.3 Endgate Tension Spring Assembly.....82
15.8.4 End Gate Adjustment Handle Assembly 84
16 Optional Equipment 86
16.1 Optional Equipment.....87
17 Schematics.....88
17.1 Electrical Schematic Serial# 427 - 602 89
17.2 Hydraulic Schematics.....93

No Picture Breakdown Available

1 Quick Order List

BOM ID	Part Number	Description	Quantity
1	112-302080	Auger Bearing Support Assembly	4
2	015-0045	Auger Coupling Chain	4
3	015-0154	Auger Coupling Half	4
4	092-0014	Auger, Lower (LH)	1
5	092-0013	Auger, Lower (RH)	1
6	112-200541	Auger, Upper (LH)	1
7	112-200540	Auger, Upper (RH)	1
8	050-0648	Cable, Steering	2
9	050-0522	Cap (Fuel Tank)	1
10	050-0522	Cap (Wash Down Tank)	1
11	093-0406	Conveyor Chain	2
12	015-0258	Conveyor Chain Bar	24
13	015-0259	Conveyor Chain Rivet	48
14	024-0230	Decal Kit	1
15	021-0266	Filter Kit (all filters)	1
15.1	021-0240	Filter, Air Main	1
15.2	021-0241	Filter, Air Pre-Cleaner	1
15.3	021-0242	Filter, Engine Oil	1
15.4	021-0246	Filter, Fuel	1
15.5	021-0239	Filter, Hydraulic In tank	1
15.6	021-0252	Filter, Hydraulic Oil	1
16	093-408756	Plastic, Hopper Outter	2
17	093-408620	Plastic, Hopper Inner	2
18	093-408622	Plastic, Front Center	1
19	093-408838	Plastic, Hopper Scraper	2
20	091-100776	Push Roller	2
21	020-0547-A	Screed Heat Strip	2
22	020-0548	Screed Temp Sensor	1
23	112-209308	Screed Plate	1
24	112-209330	Extension Wear Plate	2
25	050-0361	Spray Nozzle	2

2 Hoppers Push Bean and Sight Gauge

2.1 Hoppers and Front Plastic

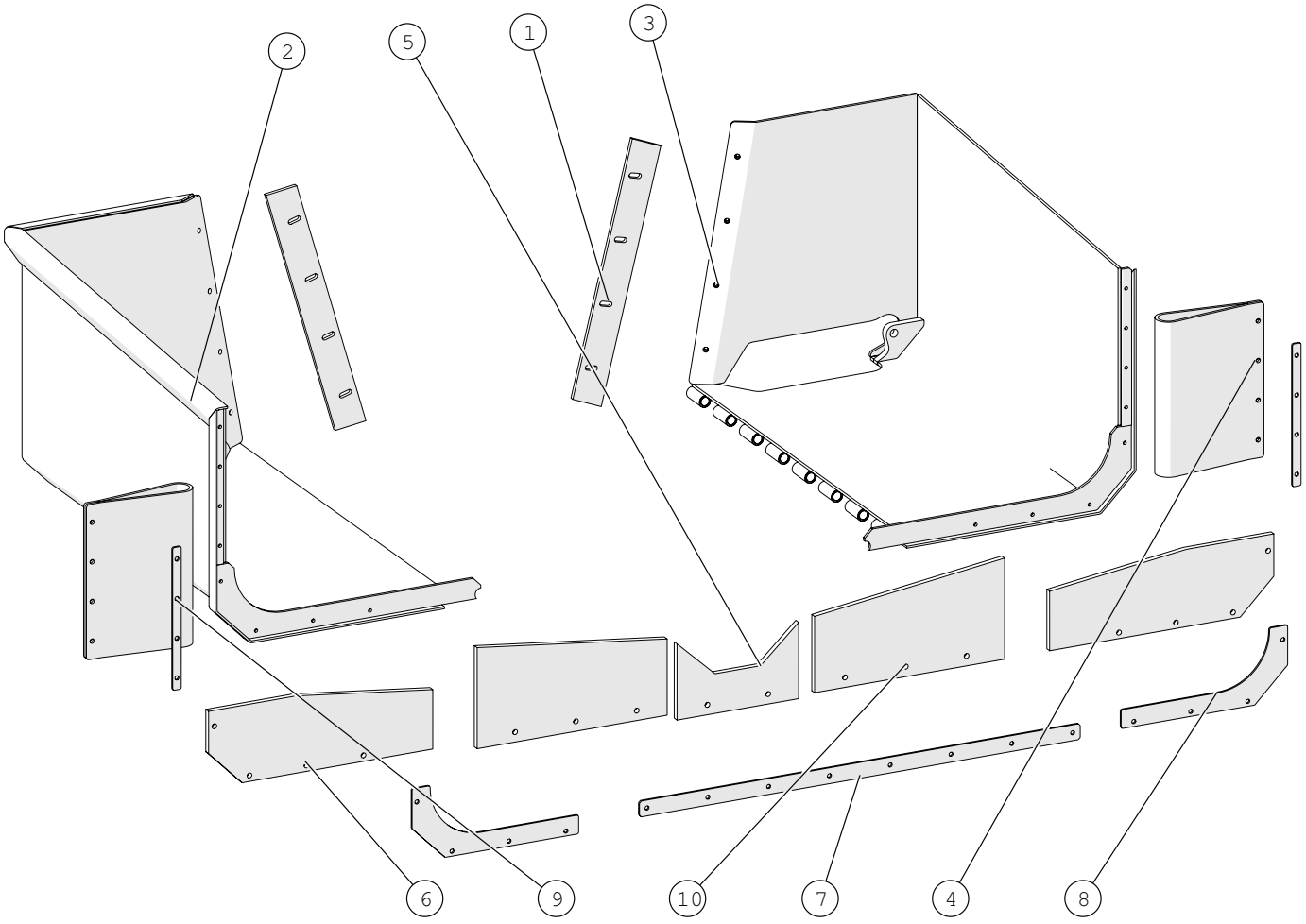

Hopper and Front Plastics

BOM ID	Part Number	Description	Qty
1	093-408838	HOPPER REAR PLASTIC WIPER	2
2	092-204800	HOPPER WELDMENT RH	1
3	092-204801	HOPPER WELDMENT LH	1
4	093-408756	HOPPER SIDE FLAPS	2
5	093-408621	HOPPER PLASTIC	1
6	093-408758	HOPPER FRONT SIDE PLASTIC	2
7	093-100748	HOPPER PLASTIC PANEL MOUNTING STRIP	1
8	093-408832	RETAINER FRONT SIDE LOWER PLASTIC	2
9	093-408830	RETAINER HOPPER SIDE RUBBER FLAP	2
10	093-408620	HOPPER PLASTIC FRONT SIDE	2
11 (Not Shown)	012-0051	CYLINDER HOPPER LIFT	2

2.2 Push Beam Assembly

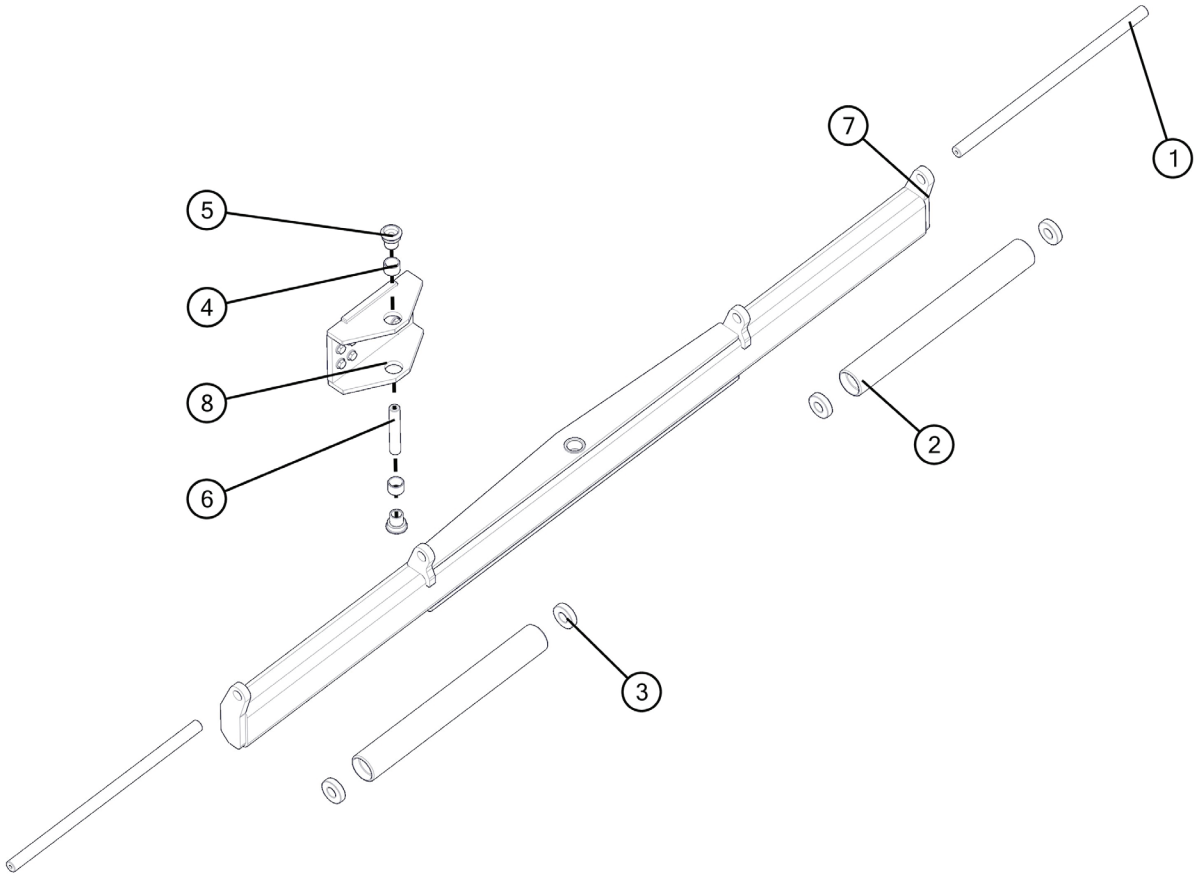

Push Beam Assembly

BOM ID	PART NUMBER	DESCRIPTION	Qty
1	093-100778	PUSH ROLLER AXLE	2
2	093-100776	TRUCK PUSH ROLLER	2
3	018-0010	BEARING PUSH ROLLER	4
4	018-622681	BRONZE BUSHING	2
5	093-104308	PUSH BEAM PIVOT PIN	2
6	093-104306	PUSH BEAM PIVOT PIN	1
7	092-100512	OSCILLATING PUSH BEAM WELDEMENT	1
8	092-408574	PUSH BEAM CARRIER WELDMENT	1

2.3 Sight Gauge Assembly

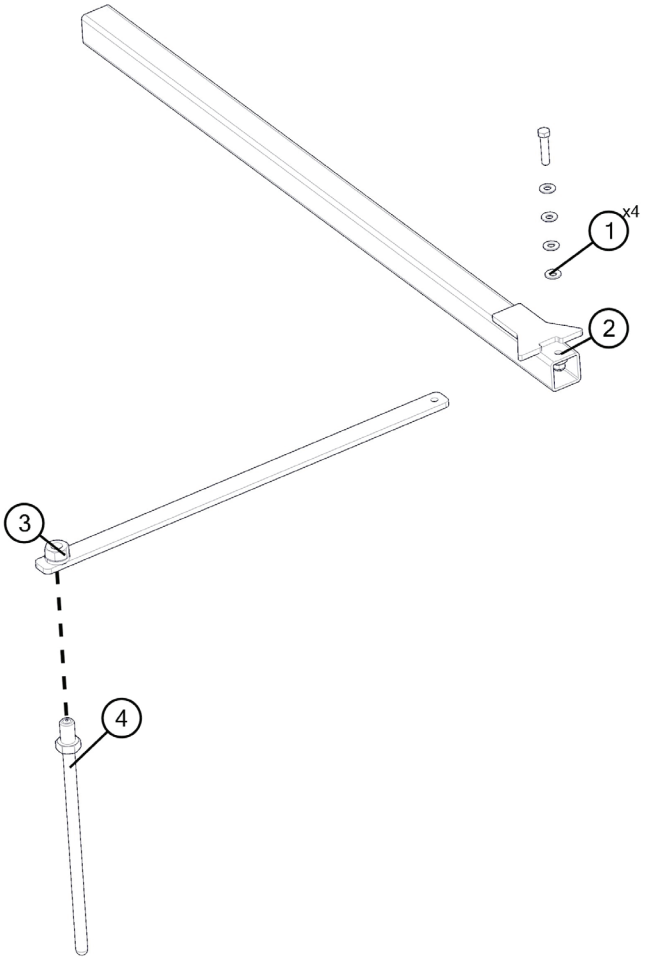

Sight Gauge Assembly

BOM ID	PART NUMBER	DESCRIPTION	Qty
1	030-0580	BELLEVILLE DISC SPRING	4
2	092-204634	SIGHT GUIDE SLIDE TUBE WELDMENT	1
3	093-204628	SIGHT GUIDE EXTENSION BAR	1
4	091-204632	SIGHT GUIDE POST SUB-ASSEMBLY	1
5 (not shown)	030-0544	HANDLE LEVER SIGHT GAUGE LATERAL LOCK	1

3 Main Tractor

3.1 Engine Compartment

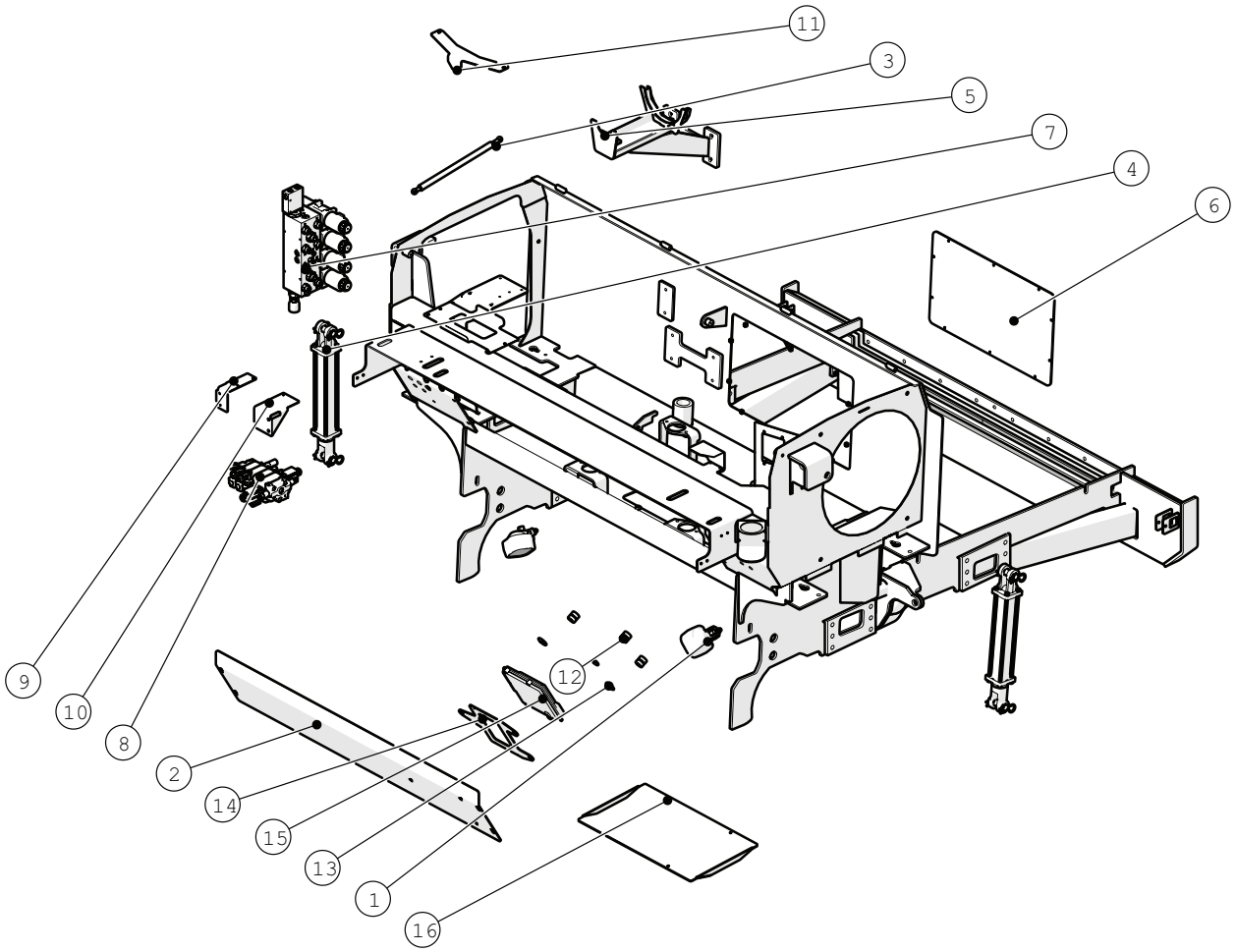

Engine Compartment

BOM ID	PART NUMBER	DESCRIPTION	Qty
1	020-0675	WORK LIGHT 12V	2
2	093-207054	REAR PANEL	1
3	050-0656	STRUT HOOD	1
4	012-0065	CYLINDER SCREED HEIGHT	2
5	092-207180	CATALYTIC CONVERTOR BRACKET WELDMENT	1
6	093-207094	FRONT COVER PLATE	1
7	017-0155	4 STATION MANIFOLD	1
8	017-0283	VALVE BANK 4 STATION	1
9	093-204442	BRACKET VALVE BANK LH	1
10	093-204440	BRACKET VALVE BANK RH	1
11	093-207378	BATTERY TIE DOWN	1
12	050-0859	RUBBER ISOLATOR	3
13	050-0860	WASHER	3
14	093-207107	BRACKET COMPUTER MOUNT	1
15	010-0810	ENGINE COMPUTER	1
16	092-207096	ENGINE COMPARTMENT BOTTOM ACCESS WELDEMENT	1
17 (Not Shown)	020-0954	CIRCUIT BREAKER 40A 3 POLE SCREED HEAT	1

3.2 Hood Assembly

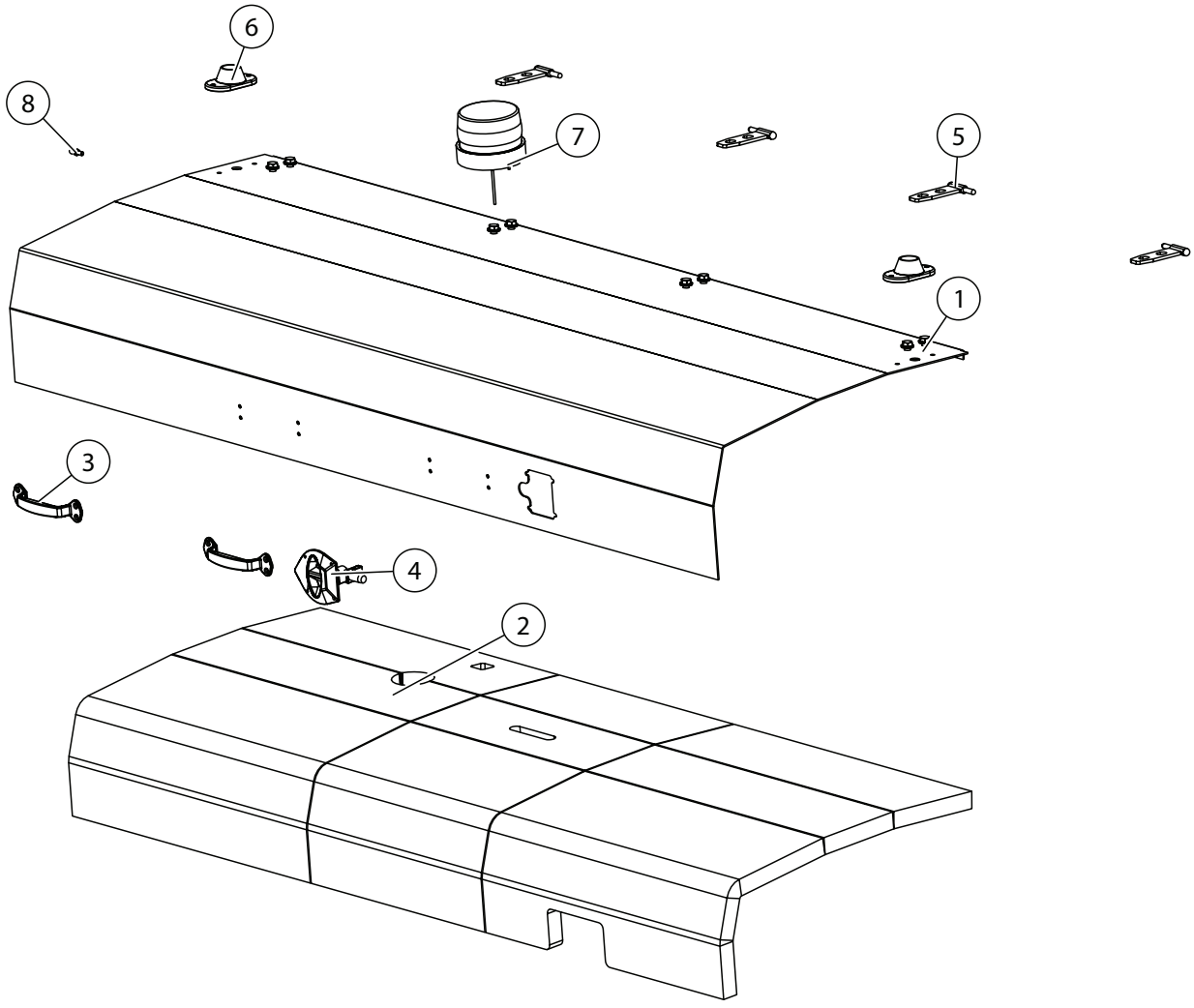

Hood Assembly

BOM ID	PART NUMBER	DESCRIPTION	Qty
1	092-207080	ENGINE COMPARTMENT HOOD WELDEMENT	1
2	027-207000	SOUND INSULATION	1
3	050-0205	CHROME GRAB HANDLE	2
4	050-0660	ADJUSTABLE LOCKING LATCH ASSEMBLY	1
5	092-204086	HOOD HINGE WELDMENT	4
6	020-1398	WORK LIGHT W/ SWIVEL	2
7	269-0081	AMBER BEACON LIGHT	1
8	050-0659	BALL STUD HOOD STRUT	1

4 Dash/Controls

4.1 Left Side Controls

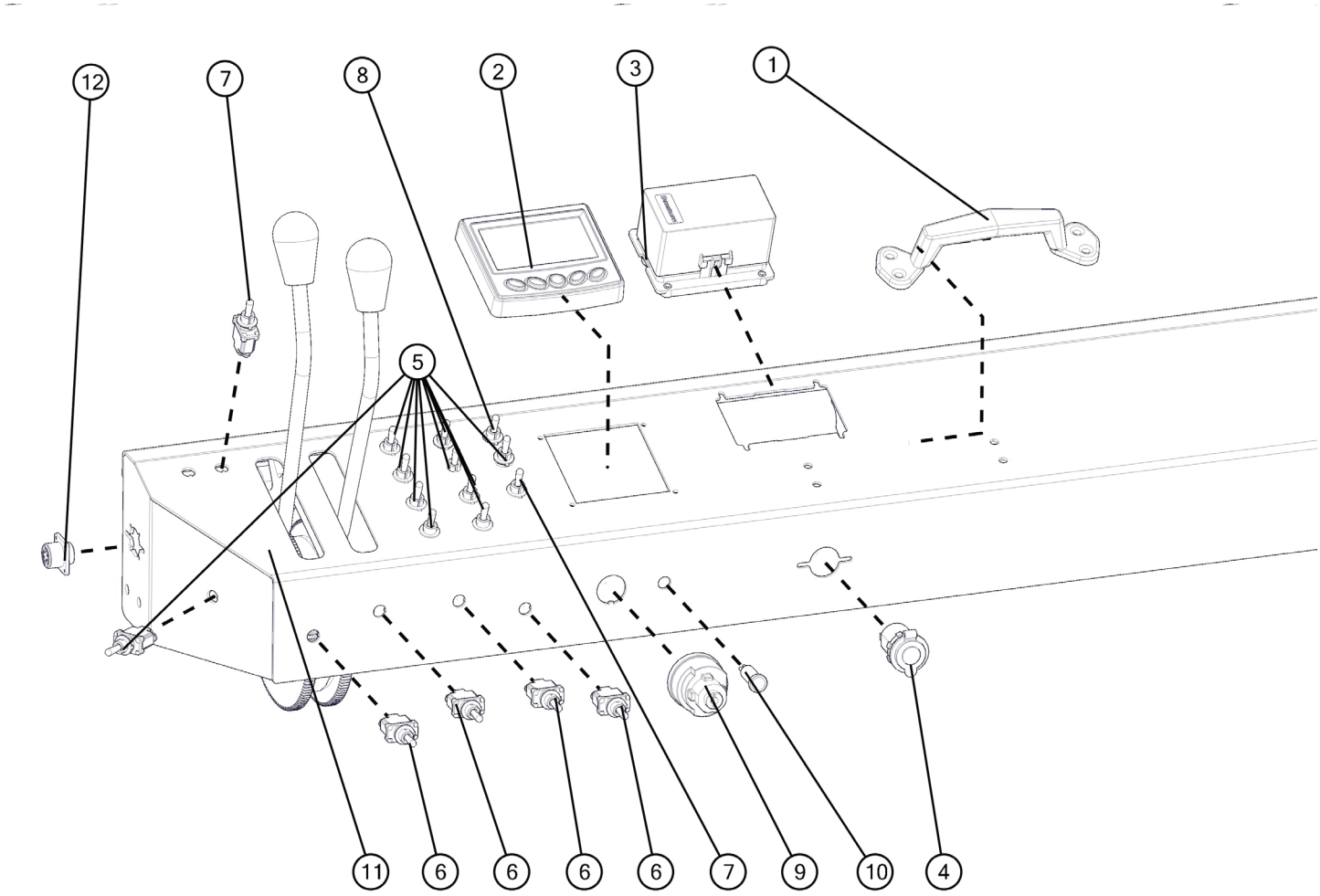

Dash Left Hand Controls

BOM ID	PART NUMBER	DESCRIPTION	Qty
1	050-0205	CHROME GRAB HANDLE	1
2	020-0905	DISPLAY	1
3	020-0476	RELAY FUSE HOLDER	1
3.1	020-0480	CIRCUIT BREAKER 20A	10
3.2	020-0481	RELAY MICRO 12V	4
4	020-0467	12 VDC ACCESSORY OUTLET	1
5	020-0405	SWITCH MULTIPLE	10
6	020-0083	SWITCH FEED CONTROLS	4
7	020-0395	SWITCH HOPPER	2
8	020-0423	SWITCH HORN	1
9	020-0955	IGNITION KEY ASSEMBLY	1
9.1	020-0955-1	SPARE KEY	1
10	020-0140	RED INDICATOR LIGHT	1
11	092-207400	OPERATOR DASH PANEL WELDEMENT	1
12	050-0372	SONIC SENSOR RECEPTACLE	1
13 (Not Shown)	020-0945	CIRCUIT BREAKER 40A 3 POLE SCREED HEAT	1

4.2 Right Side Controls

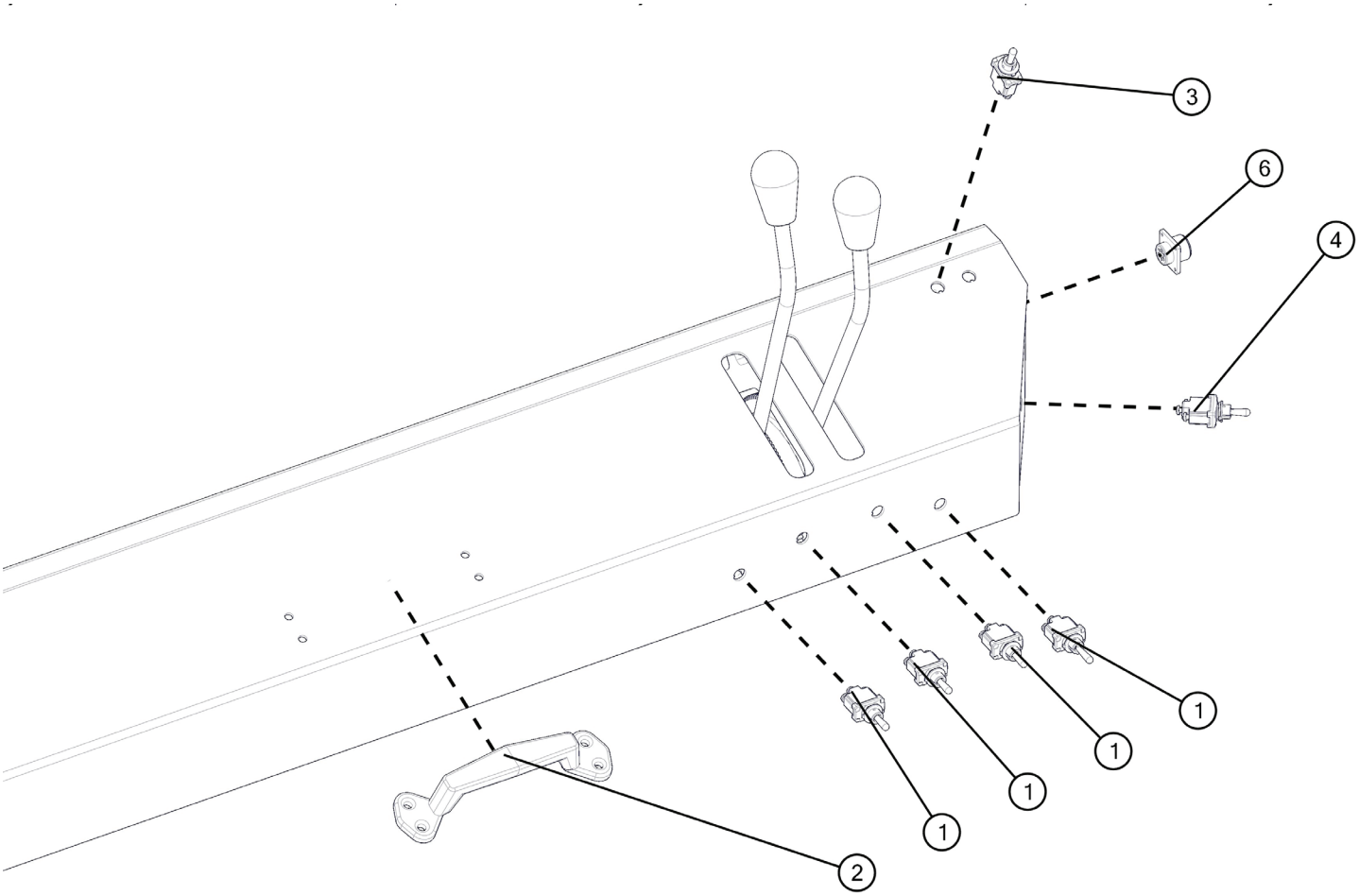

Dash Right Hand Controls

BOM ID	PART NUMBER	DESCRIPTION	Qty
1	020-0083	SWITCH FEED CONTROLS	4
2	050-0205	CHROME GRAB HANDLE	1
3	020-0395	SWITCH HOPPER	1
4	020-0405	SWITCH AUTO AUGER	1
6	050-0372	SONIC SENSOR RECEPTACLE	1

4.3 Dash Steering Controls

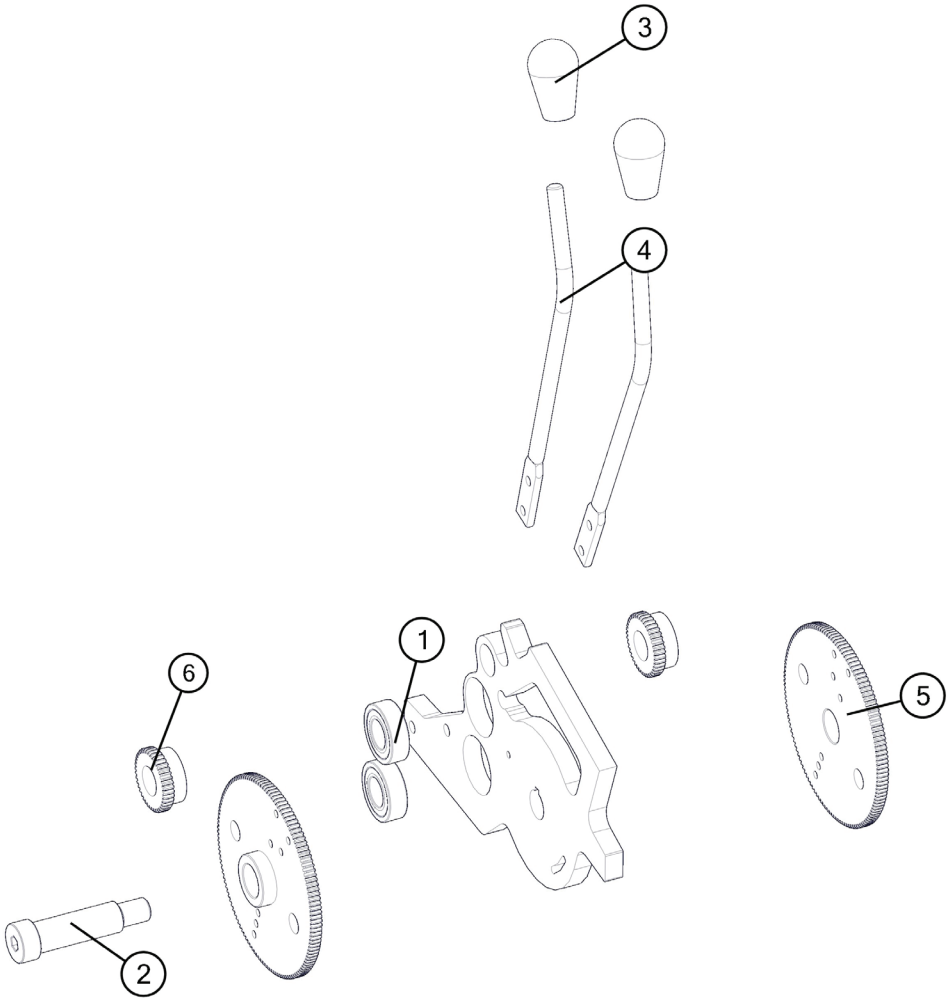

Dash Steering Controls

BOM ID	PART NUMBER	DESCRIPTION	Qty
1	018-0011	DASH STEERING SHAFT BEARING	2
2	030-0473	STEERING SHOULDER BOLT	1
3	050-0388	ROD END PLASTIC HANDLE	2
4	093-0318	STEERING LEVER	2
5	093-100074	PAVER STEERING GEAR	2
6	093-100075	PTFE GEAR, 40 TOOTH	2
6.1	030-0476	ROLL PIN 3/16TH x 2IN	2

5 Engine Assembly

5.1 Engine

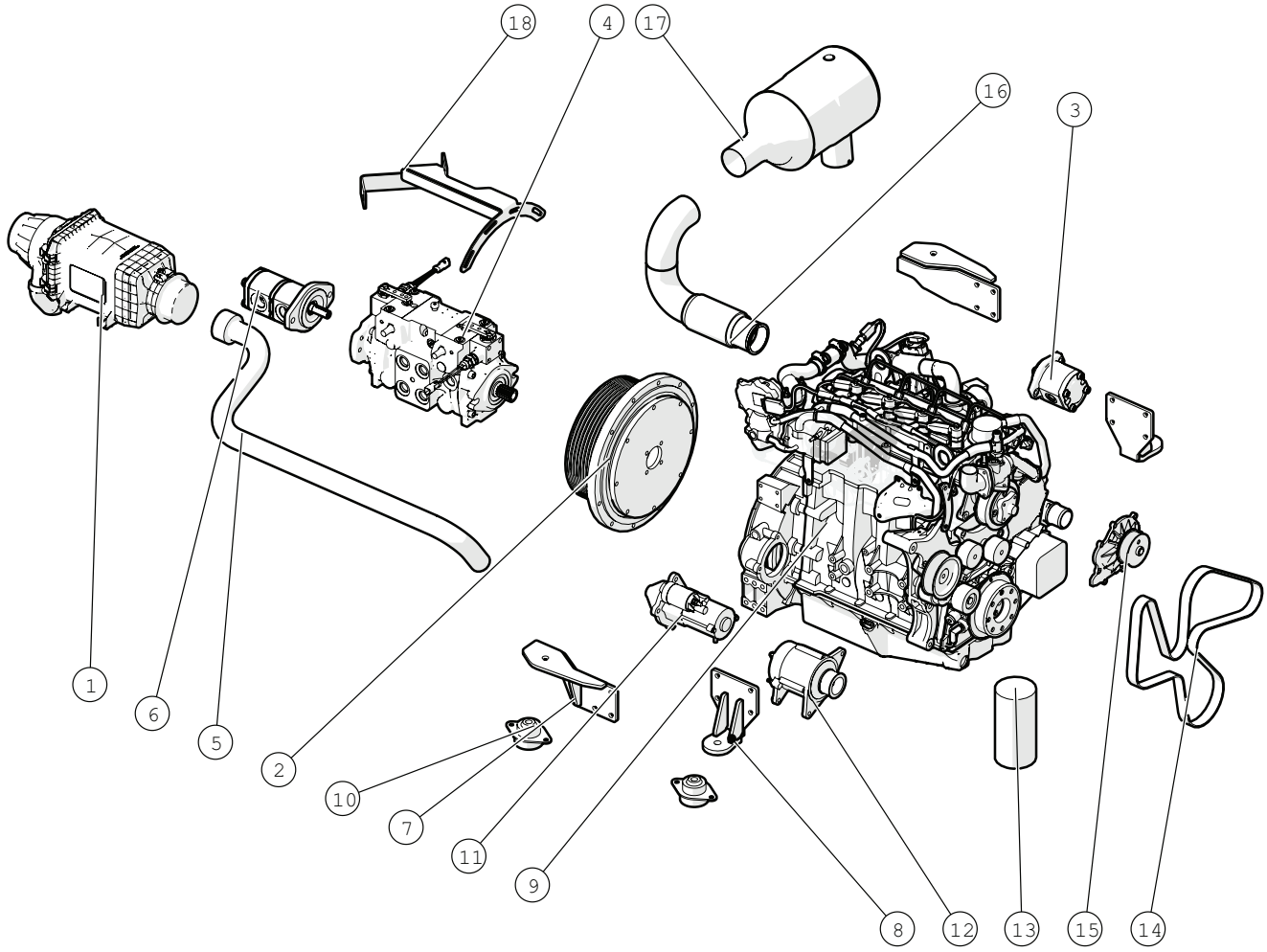

Engine Assembly

BOM ID	PART NUMBER	DESCRIPTION	Qty
1	010-0803	AIR CLEANER ASSEMBLY	1
2	020-0877	GENERATOR	1
2.1 (Not Shown)	050-204005	GENERATOR ADAPTER SHAFT	1
3	011-0152B	GEAR PUMP HYDRAULIC	1
4	011-0268	TANDEM DRIVE PUMP	1
5	093-207007	AIR INTAKE PIPE	1
6	011-0269	PUMP HYDRAULIC TANDEM	1
7	092-207040	ENGINE MOUNT WELDEMENT REAR RIGHT	1
8	092-207030	ENGINE MOUNT WELDEMENT FRONT	2
9	092-207041	ENGINE MOUNT WELDEMENT REAR LEFT	1
10	050-0789	RUBBER ISOLATOR	4
11	010-0804	STARTER	1
12	010-0805	ALTERNATOR	1
13	021-0242	OIL FILTER	1
14	010-0806	BELT ENGINE	1
15	010-0807	WATER PUMP	1
16	093-207005	EXHAUST DOWNPIPE	1
17	010-0808	EXHAUST DOC	1
18	092-207104	MUFFLER MOUNT WELDEMENT	1
19	021-0240	FILTER AIR PRIMARY	1
20	021-0241	FILTER AIR SECONDARY	1
(Not Shown)	020-207100	WIRING HARNESS ENGINE	1

5.2 Engine Cooling Package

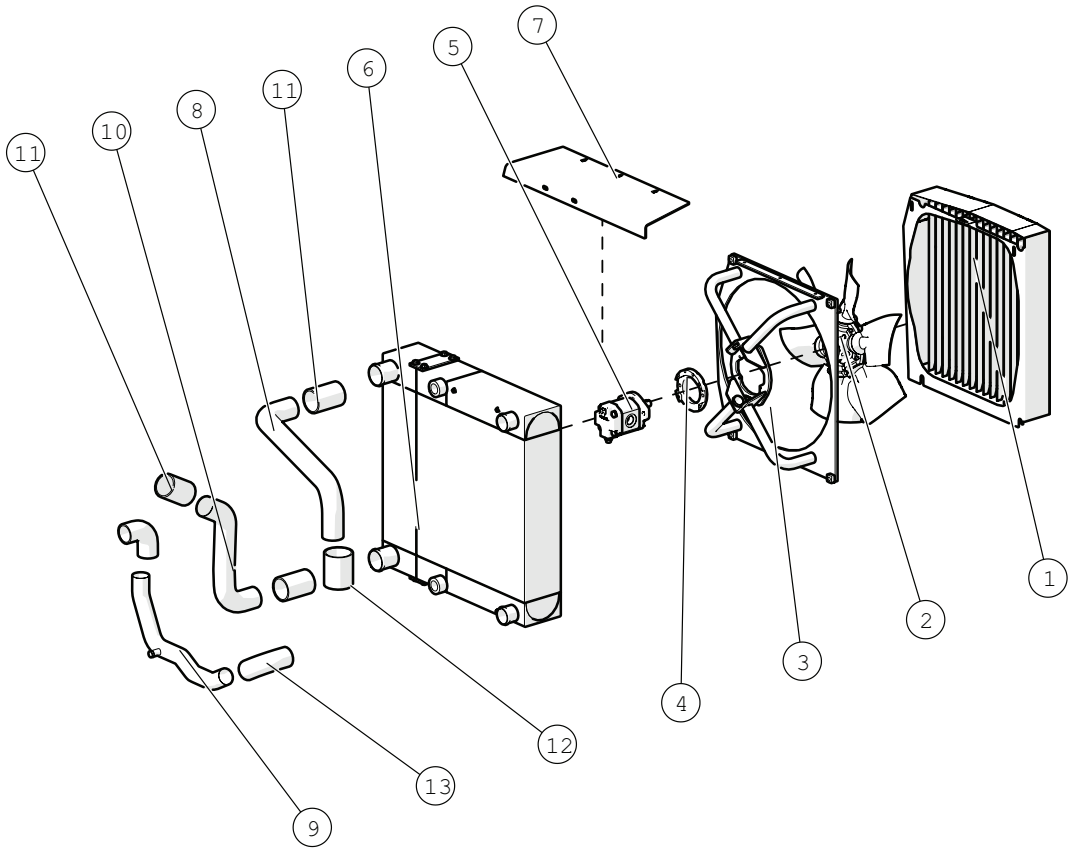

Engine Cooling Assembly

BOM ID	PART NUMBER	DESCRIPTION	Qty
1	092-207110	COOLER FAN LOUVER WELDEMENT	1
2	050-204004	FANY ASSEMBLY	1
3	092-207330	COOLER FAN BRACKET WELDEMENT	1
4	093-408336	MOUNT FAN MOTOR	1
5	013-0103	MOTOR FAN	1
6	050-204000	COOLER ASSEMBLY	1
7	093-207338	FAN SHROUD TOP PANEL	1
8	093-207001	CHARGE PIPE HOT SIDE	1
9	093-207004	COOLANT PIPE LOWER	1
10	093-207002	CHARGE PIPE COLD SIDE	1
11	010-0618	COUPLER SILICONE 2.5in	3
12	010-0619	COUPLER REDUCING 2.5in to 3in	1
13	014-0483	COUPLER 2in 90degree	2

6 Hydraulic Oil Tank (SN# 427-V through 052-Y)

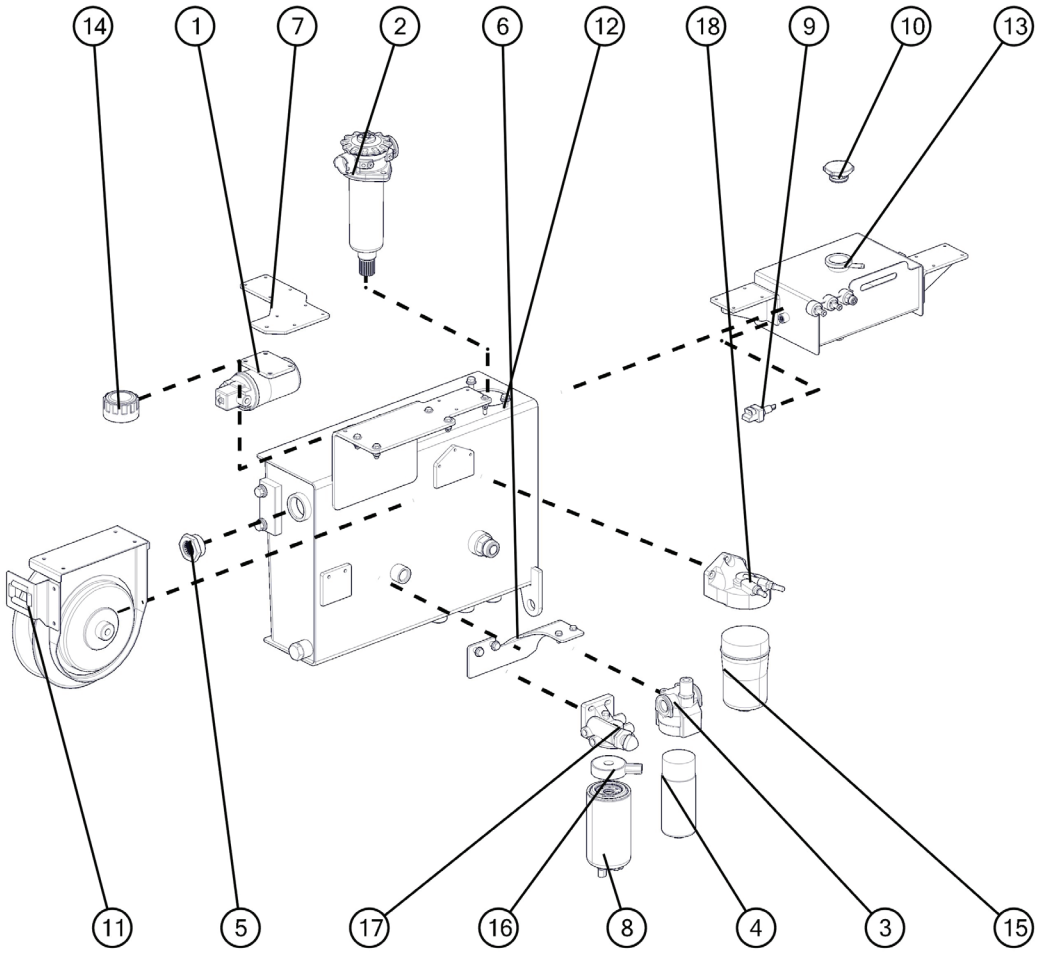

Hydraulic Oil Tank

BOM ID	Part Number	Description	Qty
1	011-0278	WASH DOWN FLUID PUMP	1
2	021-0238	IN TANK FILTER ASSEMBLY	1
2.1 (Not shown)	021-0238-1	GASKET IN TANK	1
2.2(Not Shown)	021-0239	FILTER ELEMENT REPLACEMENT IN TANK	1
3	021-0251	HYD FILTER ASSEMBLY	1
4	021-0252	HYD FILTER ELEMENT	1
5	060-0066	SIGHT GLASS	1
6	093-207128	FUEL & OIL FILTER MOUNT	1
7	093-204158	WASH DOWN PUMP TANK MOUNTING BRACKET	1
8	021-0248	FILTER FUEL WATER SEP	1
9	020-0832	SWITCH COOLANT LEVEL	1
10	010-0574	RADIATOR COOLANT TANK CAP	1
11	050-0344	HOSE REEL	1
12	092-207126	HYDRAULIC TANK WELDMENT	1
13	092-207360	DEAERATION TANK ASSEMBLY	1
14	060-0069	TANK CAP	1
15	021-0246	FILTER FUEL	1
15.1 (Not Shown)	021-0264-1	O-RING FUEL FILTER	1
16	021-0250-1	FUEL HEATER	1
17	021-0250	FILTER HEAT FUEL WATER SEP	1
18	021-0249	HEAD FILTER FUEL	1

6.1 Hydraulic Oil Tank (SN# 064-Y through 186-Z)

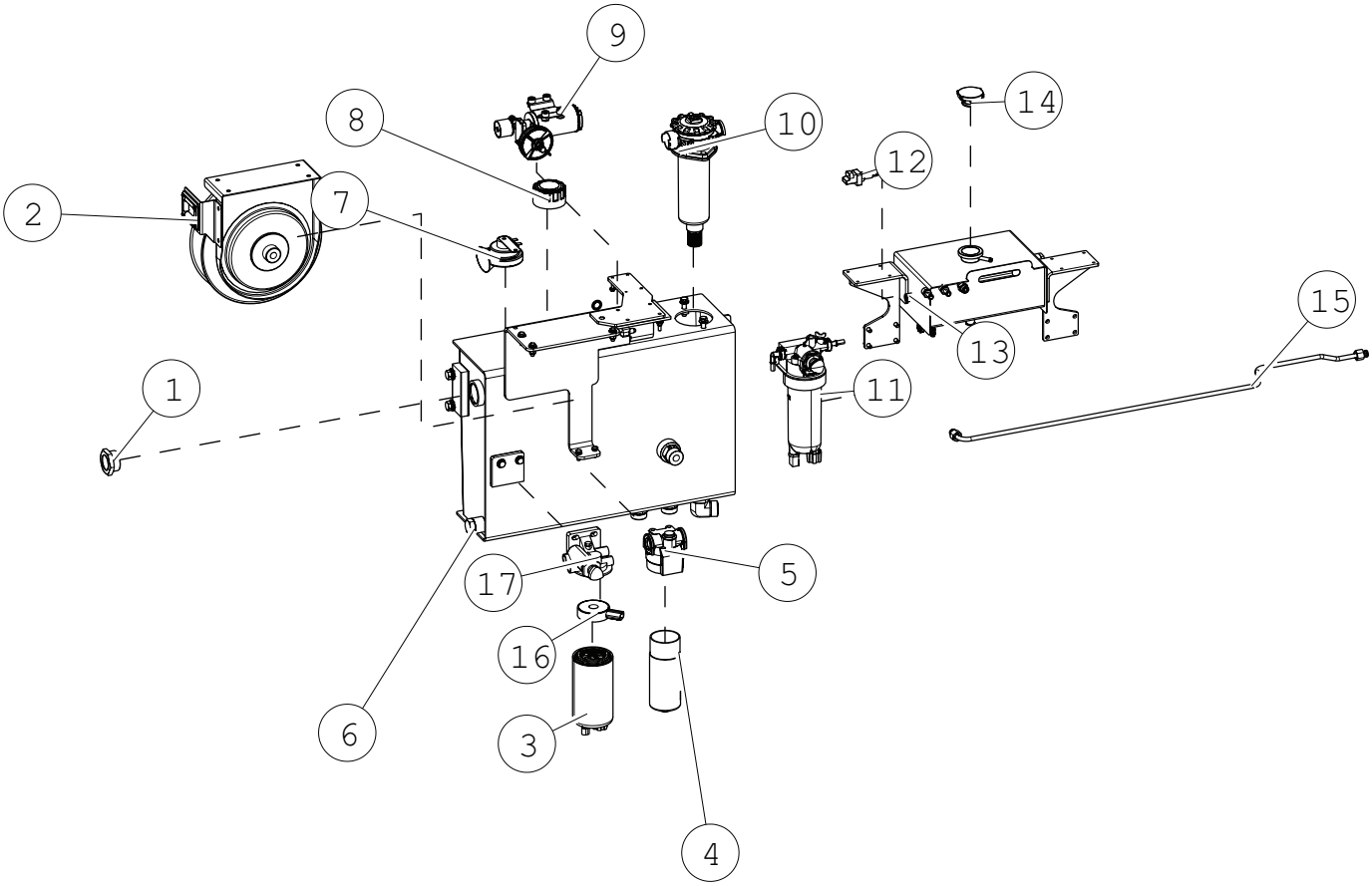

Hydraulic Oil Tank

BOM ID	PART NUMBER	DESCRIPTION	Qty
1	060-0066	SIGHT GLASS	1
2	050-0344	SPRAY WAND HOSE REEL	1
3	021-0248	FUEL FILTER WATER SEPARATOR	1
4	021-0252	HYDRUALIC OIL FILTER ELEMENT	1
5	021-0251	HYDRAULIC OIL FILTER ASSEMBLY	1
6	092-207126	HYDRAULIC TANK WELDMENT	1
7	020-0410	AUTOMOTIVE HORN	1
8	060-0069	HYDAULIC FILL NECK CAP	1
9	011-0278	PUMP WASHDOWN	1
10	021-0238	FILTER IN-TANK ASSEMBLY	1
10.1 (Not Shown)	021-0238-1	IN TANK FILTER GASKET	1
10.2 (Not Shown)	021-0239	FILTER IN TANK ELEMENT	1
11	TBD	TBD	1
12	020-0832	SENSOR COOLANT LEVEL	1
13	092-207360	DEAERATION TANK WELDMENT	1
14	010-0574	RADIATOR COOLANT TANK CAP	1
15	014-207002	COOLANT OVER FLOW TUBE	1
16	021-0250-1	FUEL WATER SEP HEATER	1
17	021-0250	FUEL WATER SEP HEAD	1

7 Fuel Tank

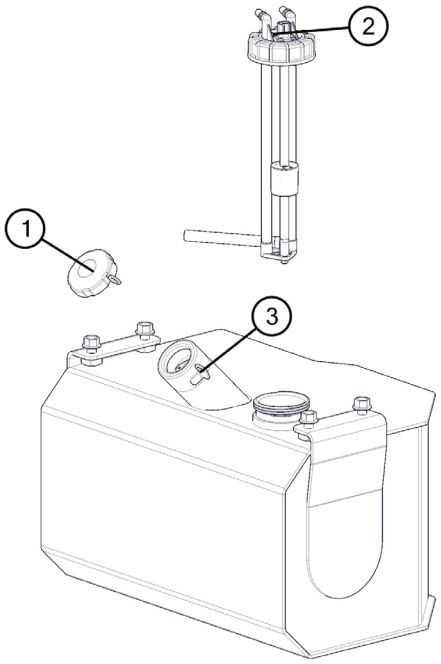

Fuel Tank

BOM ID	PART NUMBER	PART DESCRIPTION	Qty
1	050-0522	DIESEL FILL NECK CAP W/ LOCK TAB	1
2	020-1359	FUEL SENDER ASSEMBLY	1
3	092-204116	FUEL TANK WELDMENT	1

8 Wash Down Tank

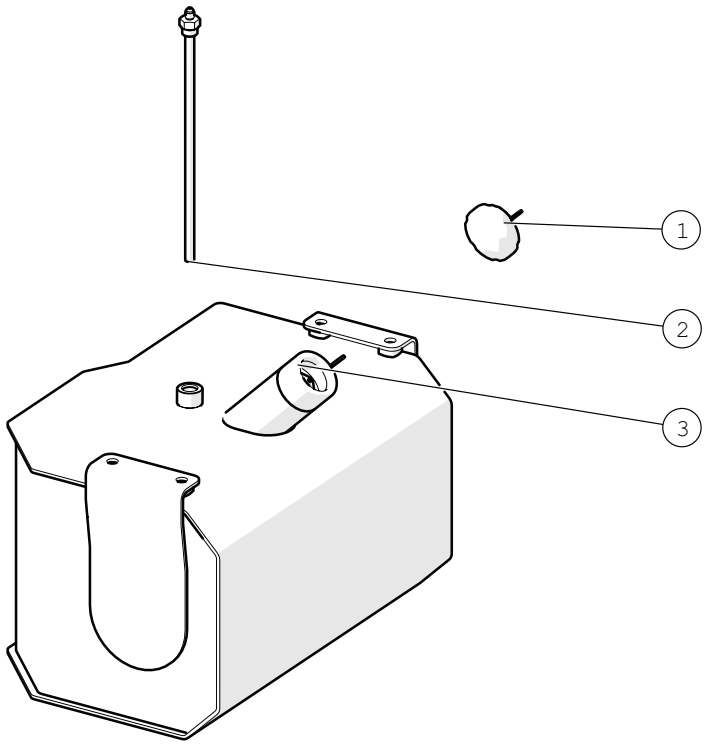

Wash Down Tank

BOM ID	Part Number	Description	Qty
1	050-0522	Cap Wash Down Locking	1
2	092-202300	Wash Down Pick up Tube	1
3	092-204117	Wash Down Tank	1

9 Flight Chain Deck

9.1 Flight Chains and Deck

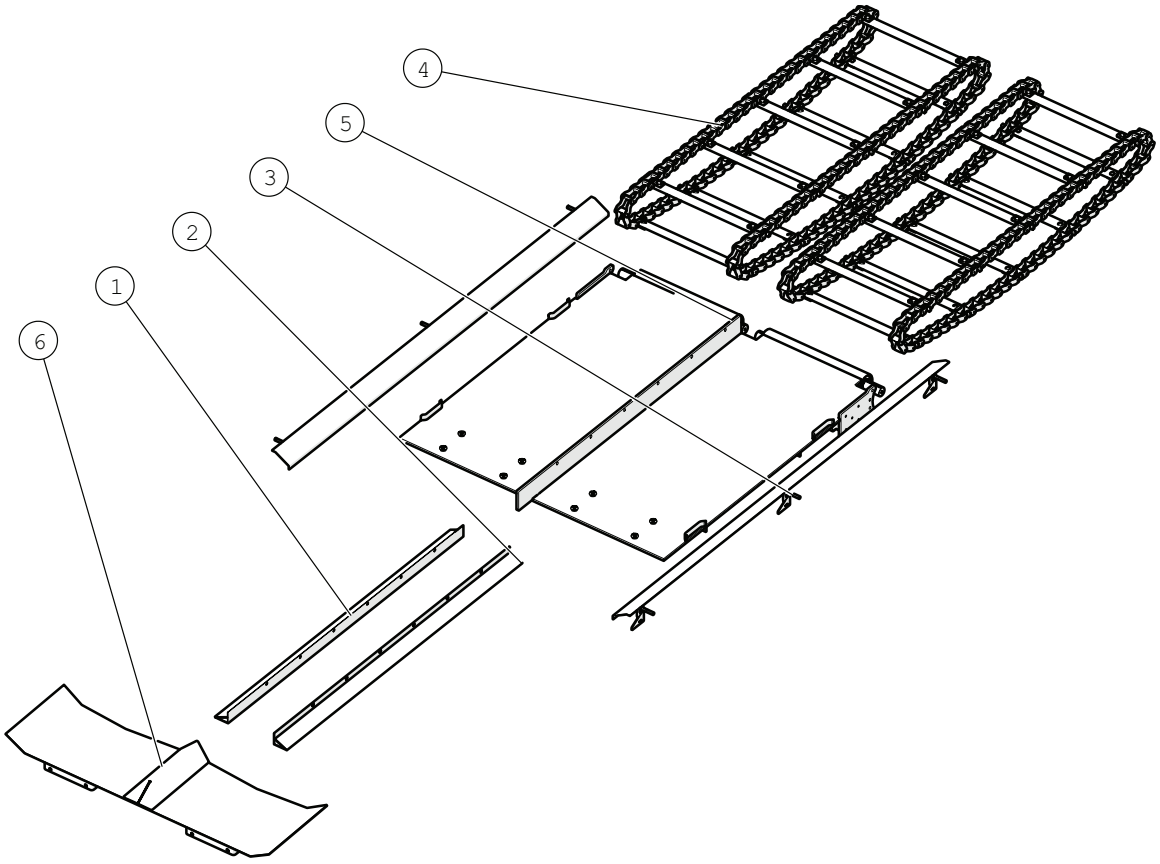

Flight Chain Deck

BOM ID	PART NUMBER	DESCRIPTION	Qty
1	092-109070	WELDEMENT CENTER COVER RIGHT	1
2	092-109071	WELDEMENT CENTER COVER LEFT	1
3	092-100784	WELDEMENT CONVEYOR SIDE COVER	2
4	093-0406	10 SECTION CONVEYOR CHAIN ASSEMBLY	2
5	092-204200	CONVEYOR DECK WELDEMENT	1
6	092-204650	CONVEYOR FRONT COVER WELDEMENT	1

9.2 Flight Chain Idler Assembly

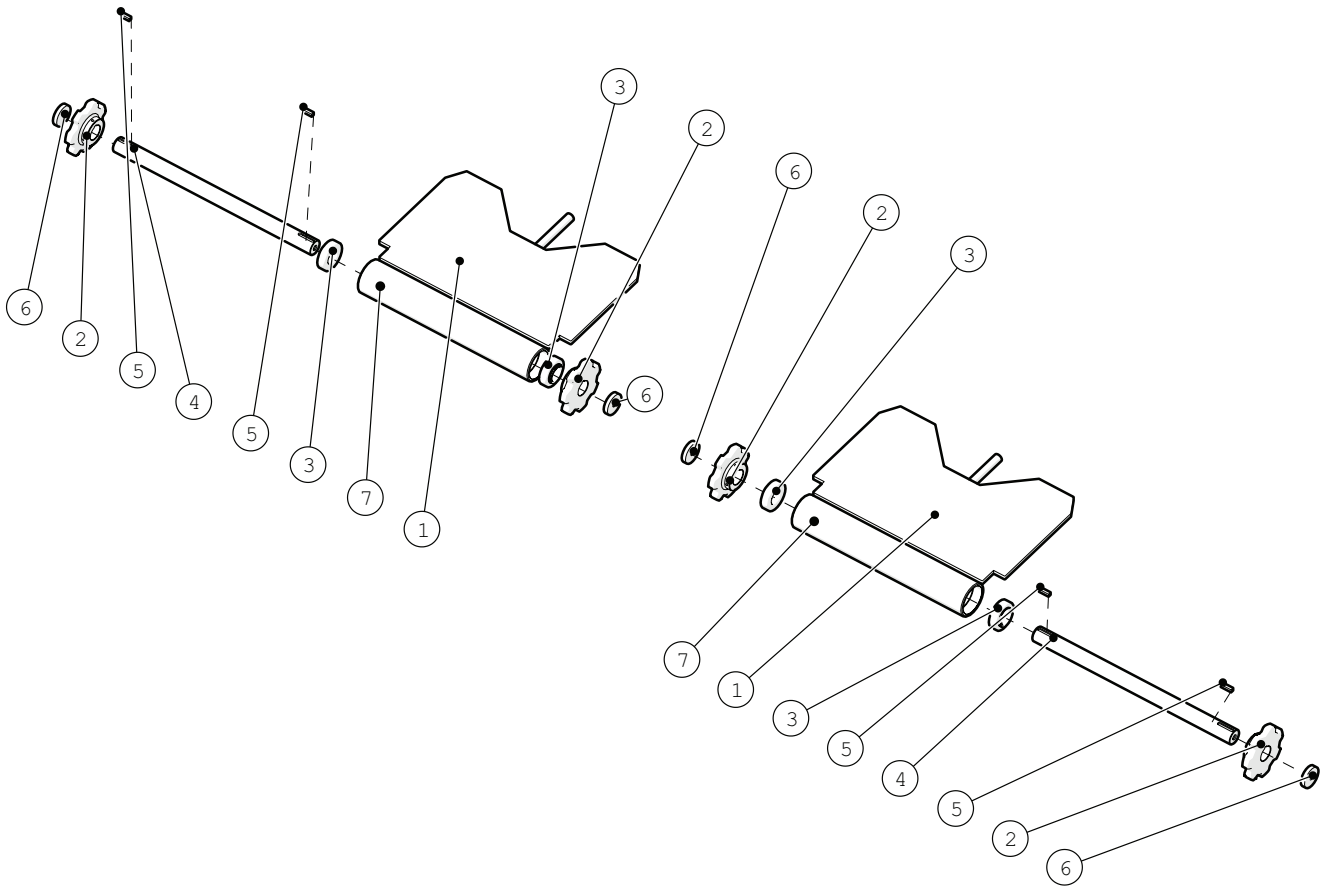

Flight Chain Idler Components

BOM ID	Part Number	Description	Qty
1	092-204220	Weldment Flight Chain Adjusting Plate	2
2	015-0204	Sprocket 7 tooth	4
3	018-0091	Bearing Flight Chain Tube	4
4	093-0333	Shaft Flight Chain Idler	2
5	093-0335	Key way .375in x 1.750in	4
6	093-0339	Cap Spacer Flight Chain	4
7	093-0334	Flight Chain Tube	2

9.3 Flight Chain Drive Assembly

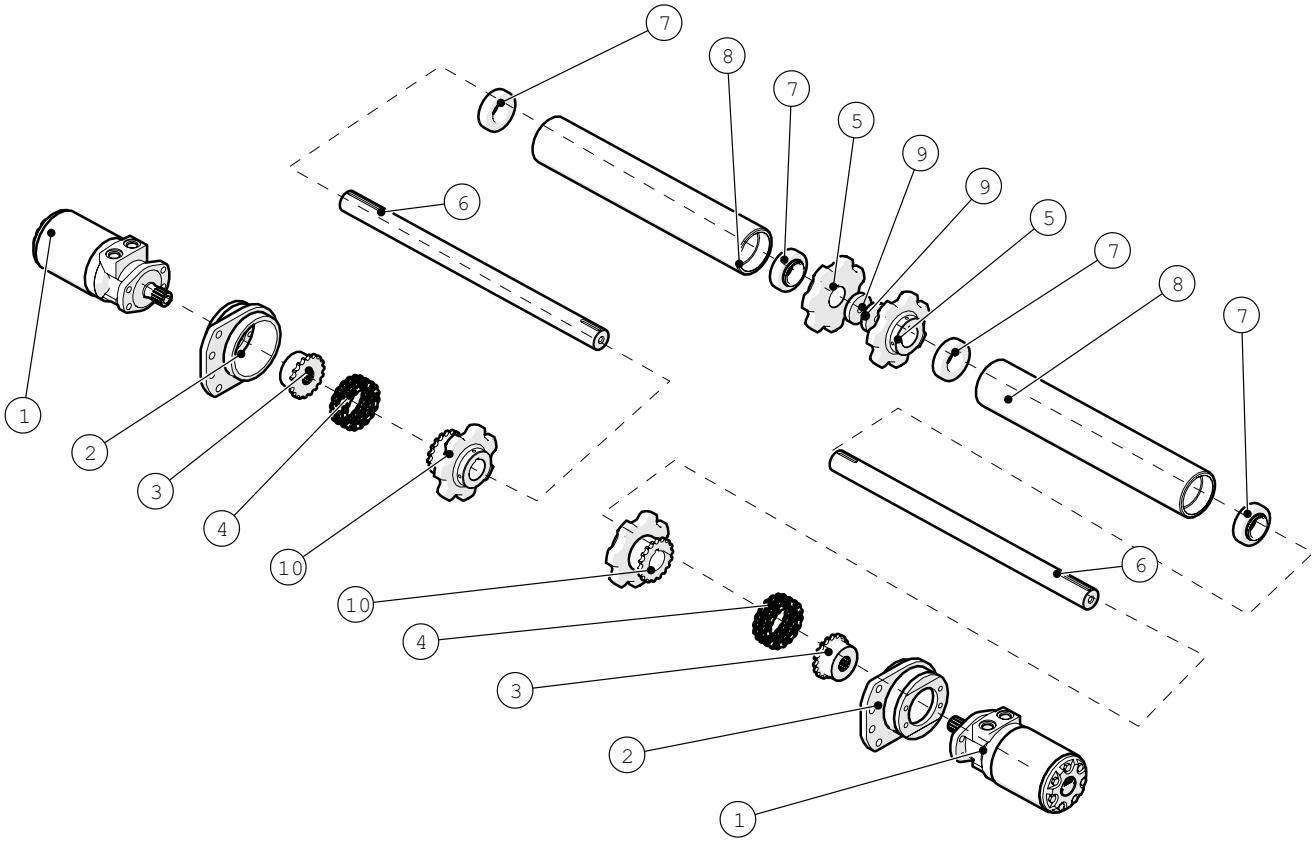

Flight Chain Drive Components

BOM ID	Part Number	Description	Qty
1	013-0068	Flight Chain Hydraulic Motor	2
2	092-204260	Flight Chain Motor Mount	2
3	015-0202	Coupling Sprocket	2
4	015-0046	Chain Coupling	2
5	015-0204	Sprocket 7 tooth Flight Chain	2
6	093-0332	Flight Chain Drive Shafts	2
7	018-0091	Flight Chain Bearings	4
8	093-0334	Flight Chain Tube	2
9	093-0339	Spacer End Cap	2
10	092-109254	Drive Sprocket	2

10 Track Drive Assemblies

10.1 Left Hand Track Drive

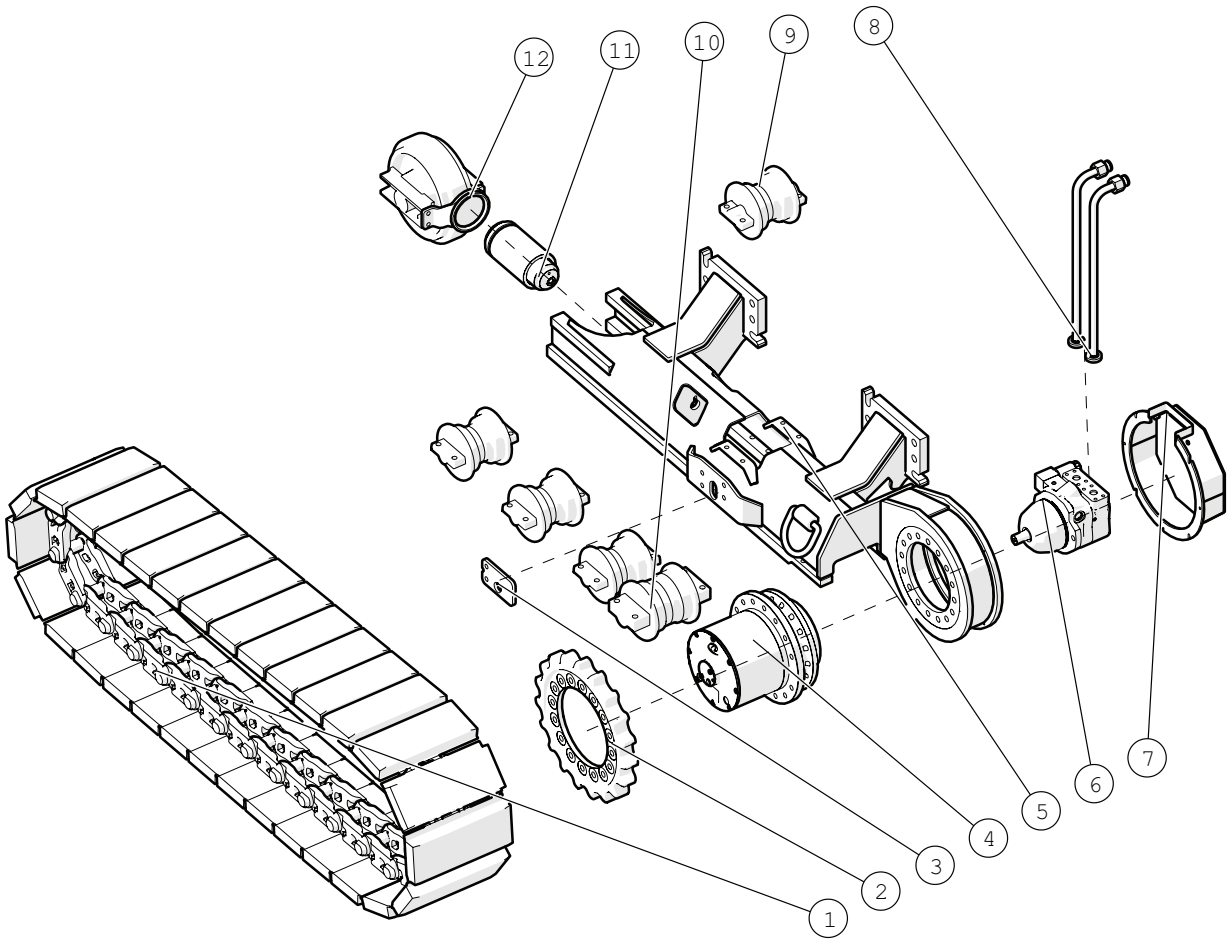

Left Drive Track Assembly

BOM ID	Part Number	Description	Qty
1	050-0626EX	Poly Pad Track Chain Assembly	1
2	015-0275A	Drive Sprocket	1
3	093-204600	Screed Arm Mount Plate	1
4	016-0058	Planetary	1
4.1	016-0071	Planetary with Brake	
5	092-204501	Undercarriage Weldment LH	1
6	011-0263	Drive Motor	1
7	092-204570	Drive Motor Cover	1
8	014-0635	Drive Motor Hydraulic Tube	2
9	050-0257	Track Roller Small	4
10	050-0163	Track Roller Large	1
11	012-0060	Track Tension Cylinder	1
12	091-204524	Track Idler	1
(Not Shown)	050-0664EX	Track Pad (Individual)	30
(Not Shown)	015-0276	Track Connecting Pin	1
(Not Shown)	030-0500	Bolt Track Pad	120
(Not Shown)	030-0501	Nut Track Pad	120

10.2 Right Track Drive

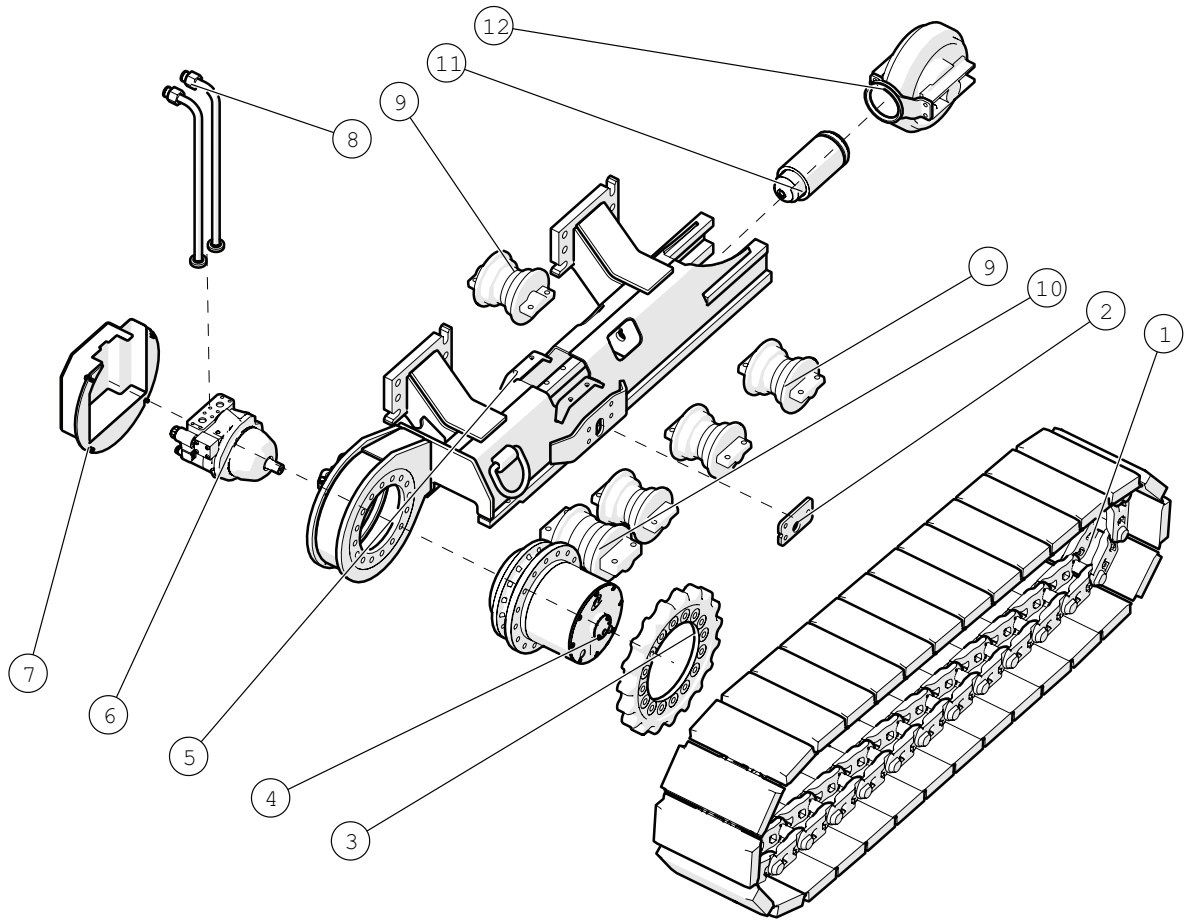

Right Drive Track Assembly

BOM ID	Part Number	Description	Qty
1	050-0626EX	Poly Track Assembly	1
2	093-204600	Tow Arm Mounting Plate	1
3	015-205504	Drive Sprocket	1
4	016-0058	Planetary	1
4.1	016-0071	Planetary with Brake	
5	092-204500	Undercarriage Weldment RH	1
6	011-0263	Drive Motor	1
7	092-204176	Drive Motor Cover	1
8	014-0635	Drive Motor Hydraulic Tube	2
9	050-0257	Track Roller Small	4
10	050-0163	Track Roller Large	1
11	012-0060	Track Tension Cylinder	1
12	091-204524	Track Tension Idler	1
(Not Shown)	050-0664EX	Track Pad (Individual)	30
(Not Shown)	015-0276	Track Connecting Pin	1
(Not Shown)	030-0500	Bolt Track Pad	120
(Not Shown)	030-0501	Nut Track Pad	120

11 Tow Arms

11.1 Tow Arm Weldments

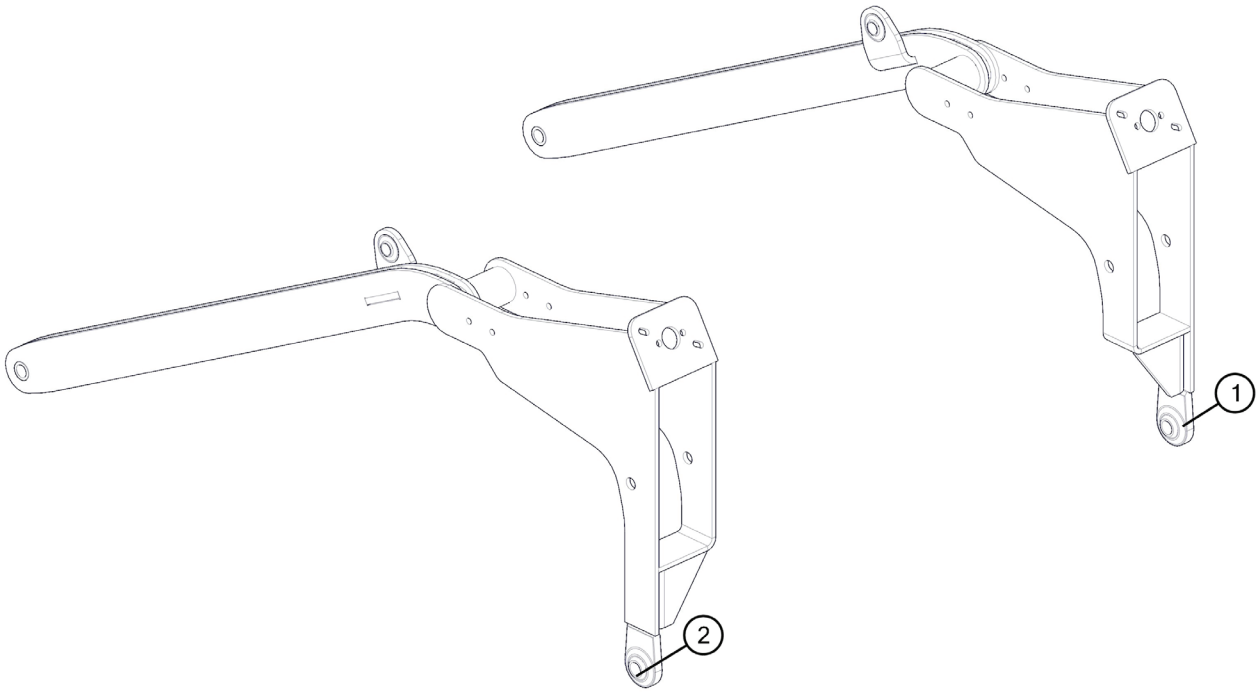

Screed Arms

BOM ID	Part Number	Description	Qty
1	112-209552	SCREED ARM RH	1
2	112-209553	SCREED ARM LH	1
3 (Not Shown)	012-0065	SCREED LIFT CYLINDER	2

11.2 Tow Arm Depth Adjustment Assembly

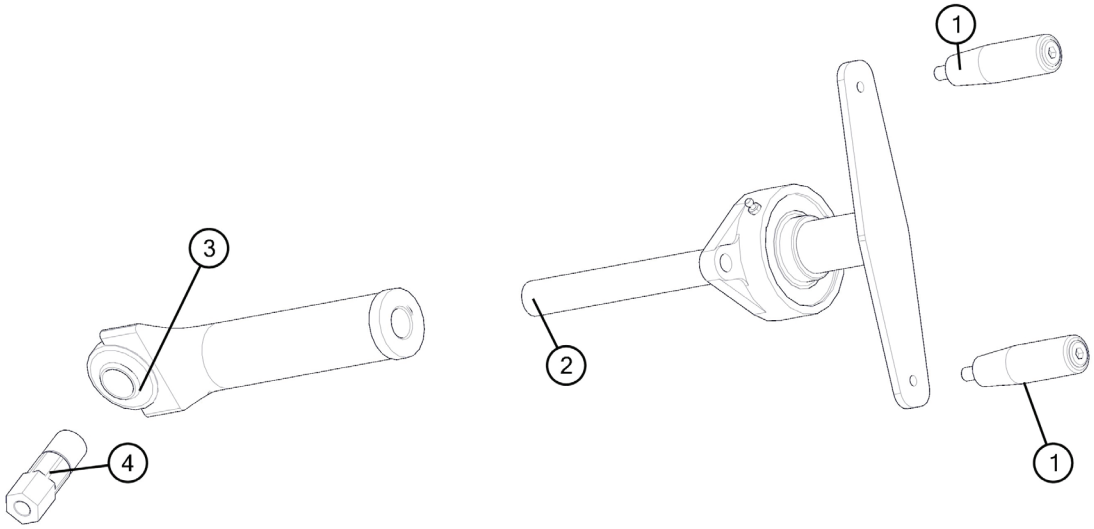

Depth Adjustment Handles

BOM ID	Part Number	Description	Qty
1	113-100427	HANDLE	2
2	112-209070	DEPTH ADJUSTMENT SCREW WELDMENT	1
2.1	111-209070	DEPTH ADJUSTMENT SCREW ASSEMBLY W/ PLASTIC HANDLES	1
3	112-209400	DEPTH ADJUSTMENT NUT	1
4	113-209404	DEPTH ADJUSTMENT PIN	1

11.3 Tow Arm Match Height Adjustment

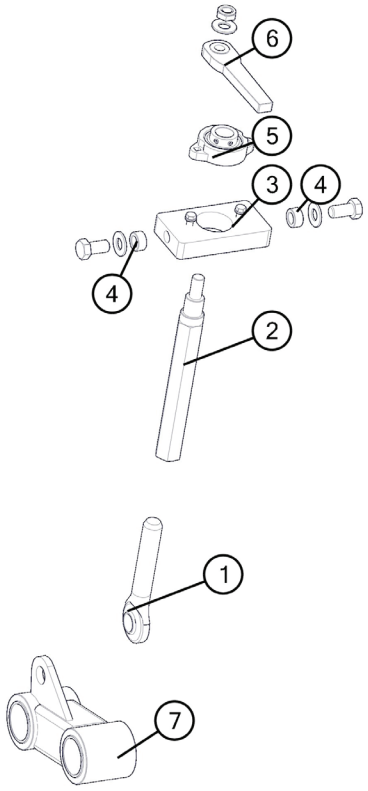

Match Height Adjustment Handle

BOM ID	Part Number	Description	Qty
1	112-209582	Extension Height Adjustment Threaded	1
2	113-209182	Extension Height Hex Rod	1
3	113-209180	Extension Height Block	1
4	113-209184	Spacer	2
5	018-0027	Extension Height Bearing	1
6	111-104170	Handle Ratcheting	1
7	111-209140	Link Pivot Pin	1

12 Main Screed

12.1 Screed Top Covers

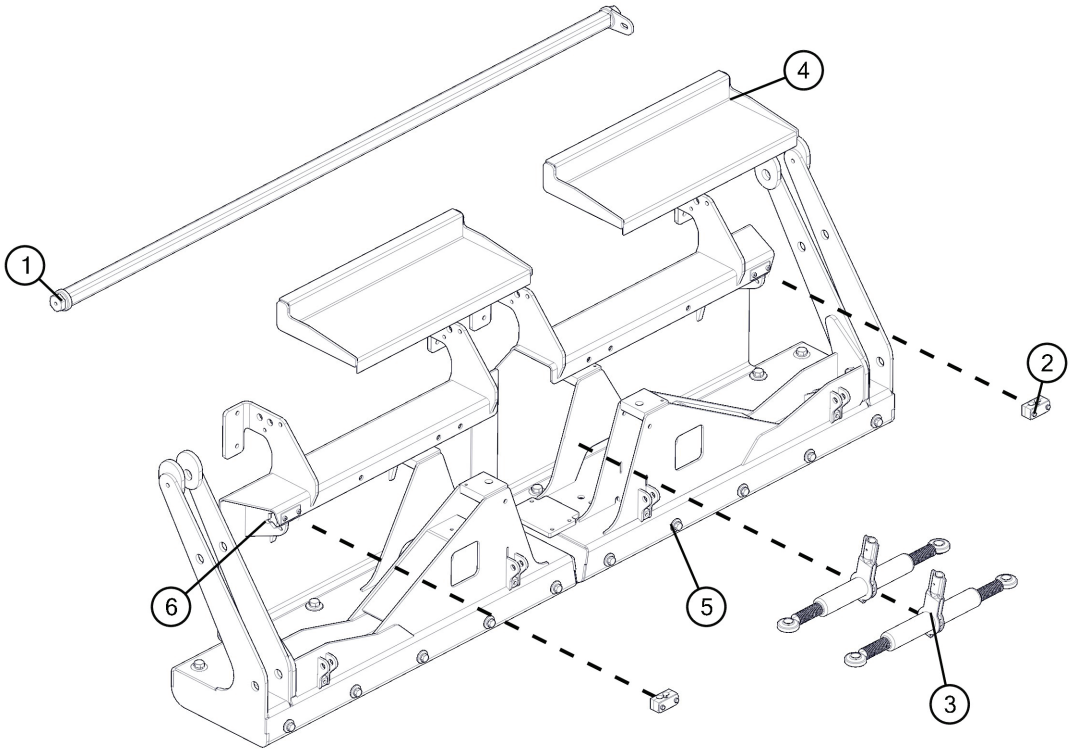

Main Screed Top Assembly

BOM ID	PART NUMBER	DESCRIPTION	Qty
1	112-209430	TOW ARM STABILIZER WELDEMENT	1
2	050-0415	3 HOSE CLAMP ASSEMBLY	2
3	050-0147A	SCREED CROWN RACHETJACK	2
4	112-200522	UPPER WALKBOARD	2
5	112-209302	MAIN SCREED COVER WELDEMENT, RIGHT	1
6	112-209303	MAIN SCREED COVER WELDEMENT, LEFT	1
7 (Not Shown)	112-209100	WALKBOARD WELDMENT LH AND RH	2
8 (Not Shown)	111-100701	EXTENSION WALKBOARD PULL OUT	2
9 (Not Shown)	020-0667	VIBRATOR MOTOR	1

12.2 Screed Bottom Wear Plate Assembly

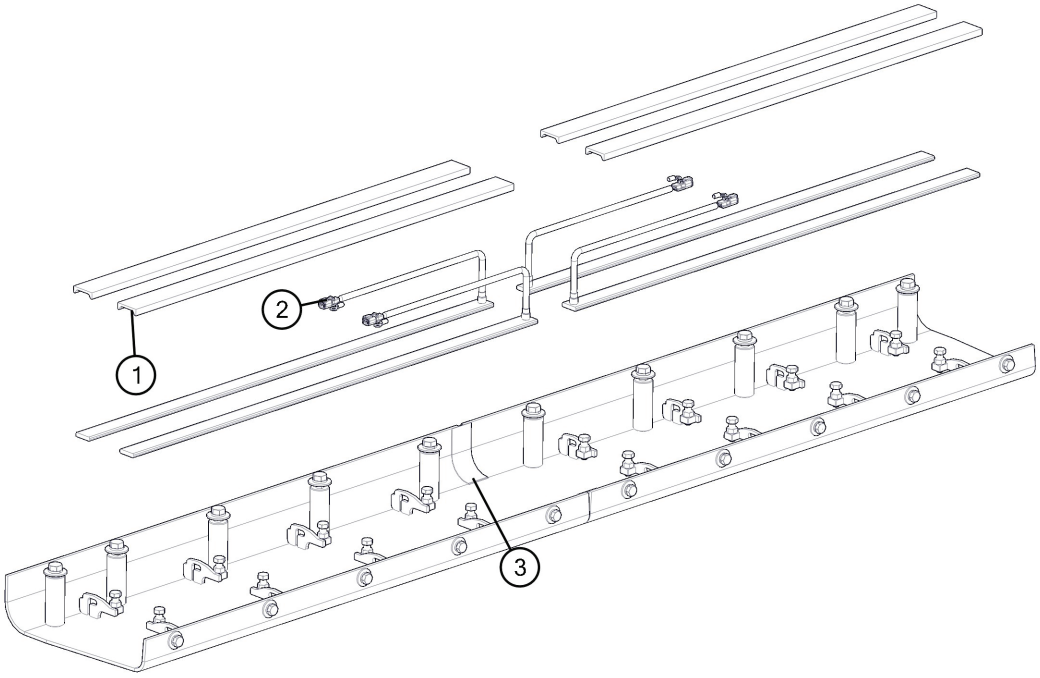

Screed Bottom Assembly

BOM ID	PART NUMBER	DESCRIPTION	Qty
1	113-309290	HEAT STRIP RETAINER	4
2	020-0547-A	HEAT ELEMENT	4
2.1	020-0548	SENSOR TEMPERATURE SCREED HEAT	1
3	112-209308	SCREED BOTTOM WELDEMENT, ELECTRIC HEAT	1

12.3 Left Hand Screed Tower Assembly

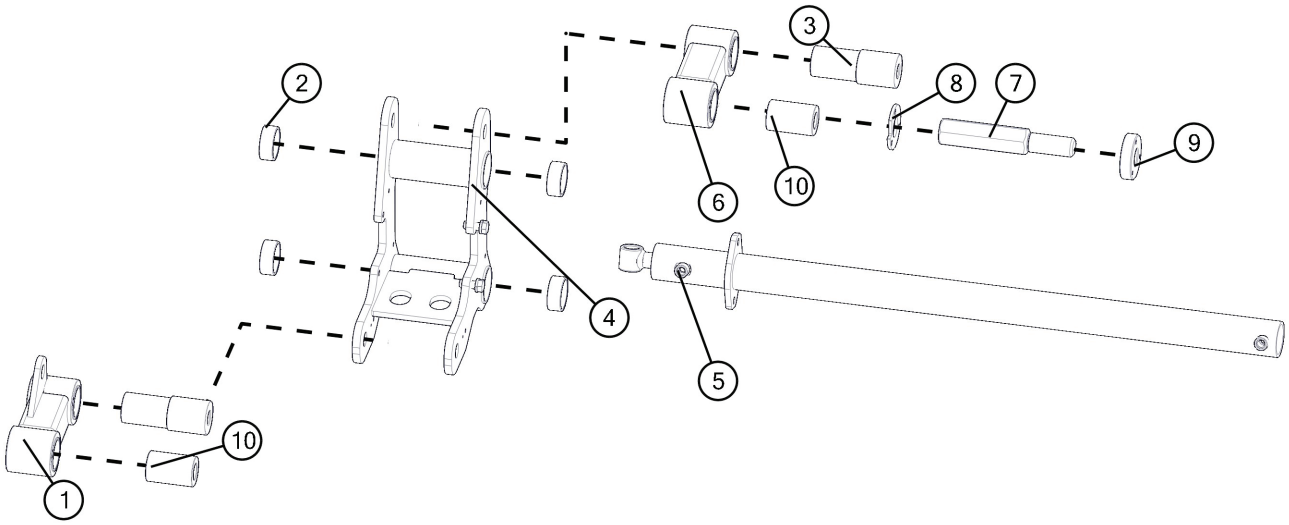

LH Screed Sub Assembly

BOM ID	PART NUMBER	DESCRIPTION	Qty
1	111-209140	EXTENSION PIVOT ASSEMBLY, LOWER	1
2	018-0098	COMPOSITE BUSHING	4
3	113-209152	PIVOT ROD	2
4	112-209012	LINK TOWER	1
5	012-0069	EXTENSION CYLINDER	1
6	111-209142	EXTENSION PIVOT ASSEMBLY, UPPER	1
7	113-209080	SLOPE EXTENSION ADJ ROD	1
8	113-209084	SLOPE ADJ RETAINER	1
9	113-209656	EXTENSION SLOPE ADJ NUT	1
10	113-209150	UPPER LINK PIVOT ROD	1
11	113-209528	PIN EXTENSION CYLINDER	1

12.4 Right Hand Screed Tower Assembly

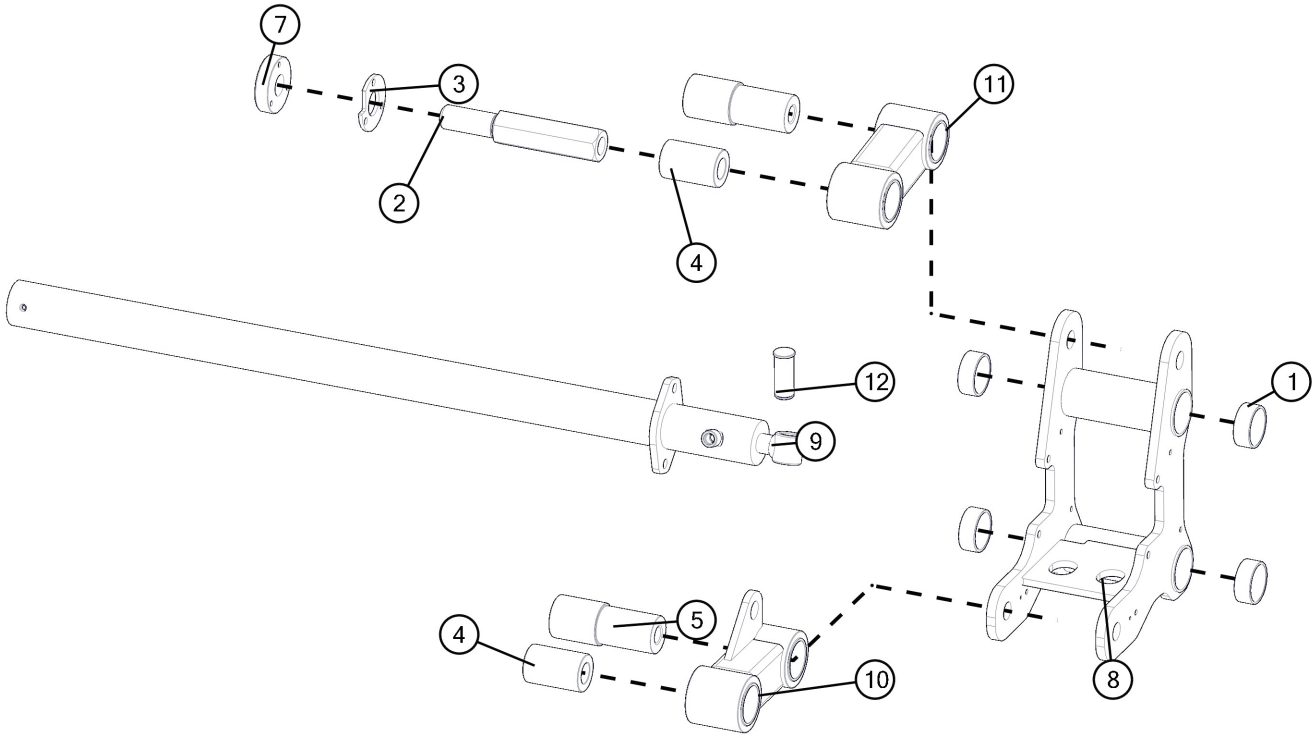

RH Screed Sub Assembly

BOM ID	PART NUMBER	DESCRIPTION	Qty
1	018-0098	COMPOSITE BUSHING	4
2	113-209080	TOWER ADJUSTMENT BOLT	1
3	113-209084	TOWER CONTROL NUT RETAINER	1
4	113-209150	PIVOT SPACER	1
5	113-209152	PIVOT ROD	2
7	113-209656	TOWER ADJUSTING NUT	1
8	112-209012	FREEDOM LINK TOWER	1
9	012-0069	CYLINDER EXTENSION	1
10	111-209140	EXTENSION PIVOT ASSEMBLY, LOWER	1
11	111-209142	EXTENSION PIVOT ASSEMBLY, UPPER	1
12	113-209528	EXTENSION CYLINDER PIN	1

13 Screed Heat Control Box

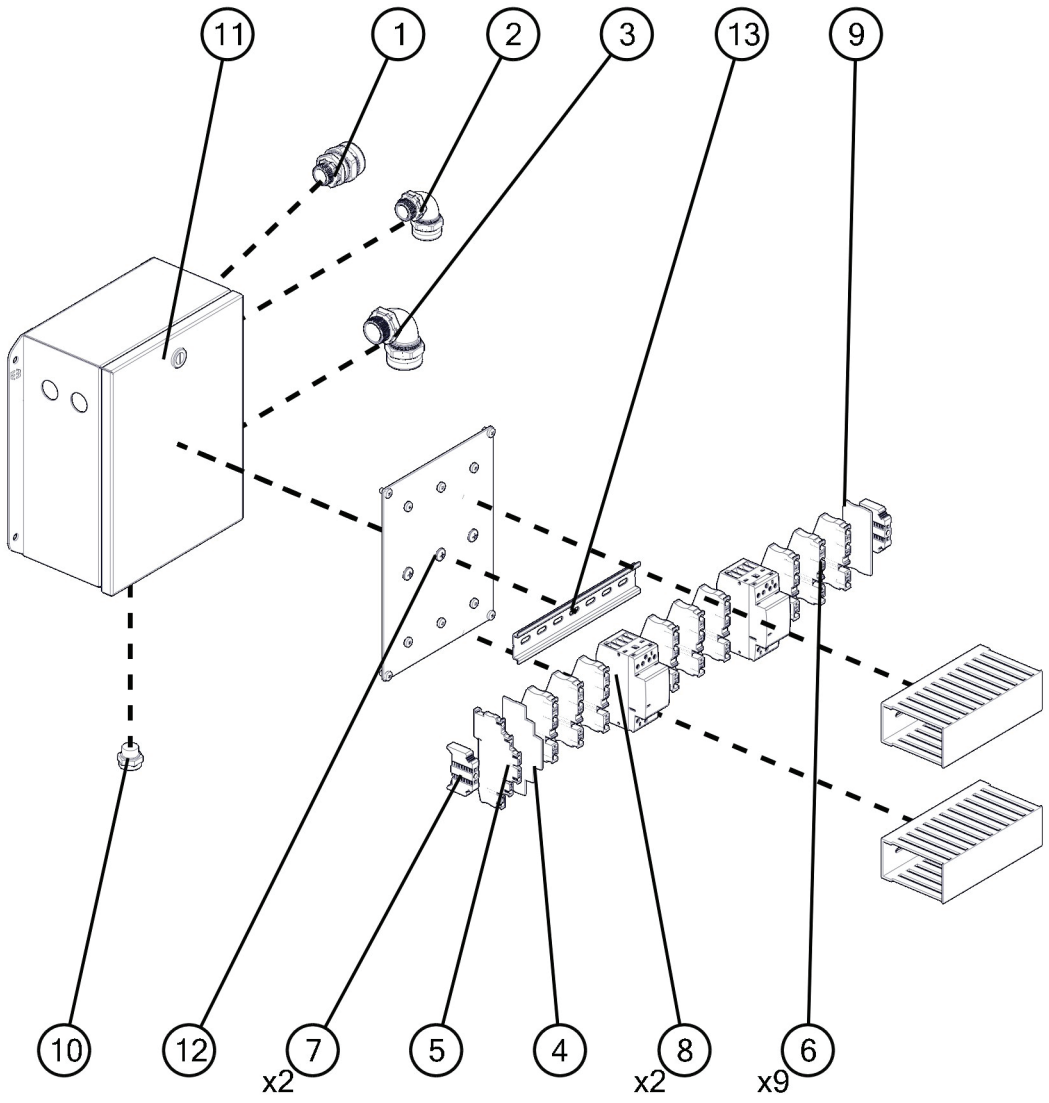

Please Check Serial Number Range. Important Changes between Control Box Versions
If you do not know the differences Please Contact Mauldin Technical Support

Screed Heat Control Box

BOM ID	Part Number	Description	Qty
1	020-0763	CORD GRIP, STRAIGHT, 1/2” CONDUIT	1
2	020-0764	CORD GRIP, 90 DEG, 1/2” CONDUIT	1
3	020-0766	CORD GRIP, 90 DEG, 3/4” CONDUIT	1
4	020-0999	END COVER	1
5	020-1000	TERMINAL BLOCK DIN RAIL GROUND	1
6	020-1002	TERMINAL FEED-THROUGH DIN RAIL	9
7	020-1004	END CLAMP DIN RAIL	2
8	020-1023	CONTACTOR 25 AMP 480VAC 4-POLE 12VDC CONTROL	2
9	020-1081	TERMINAL BLOCK END COVER	1
10	020-1102	VENT ENCLOSURE PLUG	1
11	020-209300	HEAT CONTACTOR ENCLOSURE	1
12	020-209301	SCREED HEAT PANEL	1
13	020-209302	DIN RAIL HEAT BOX	1
14	020-209303	DUCT WIRING	2

13.1 Screed Heat Control Box

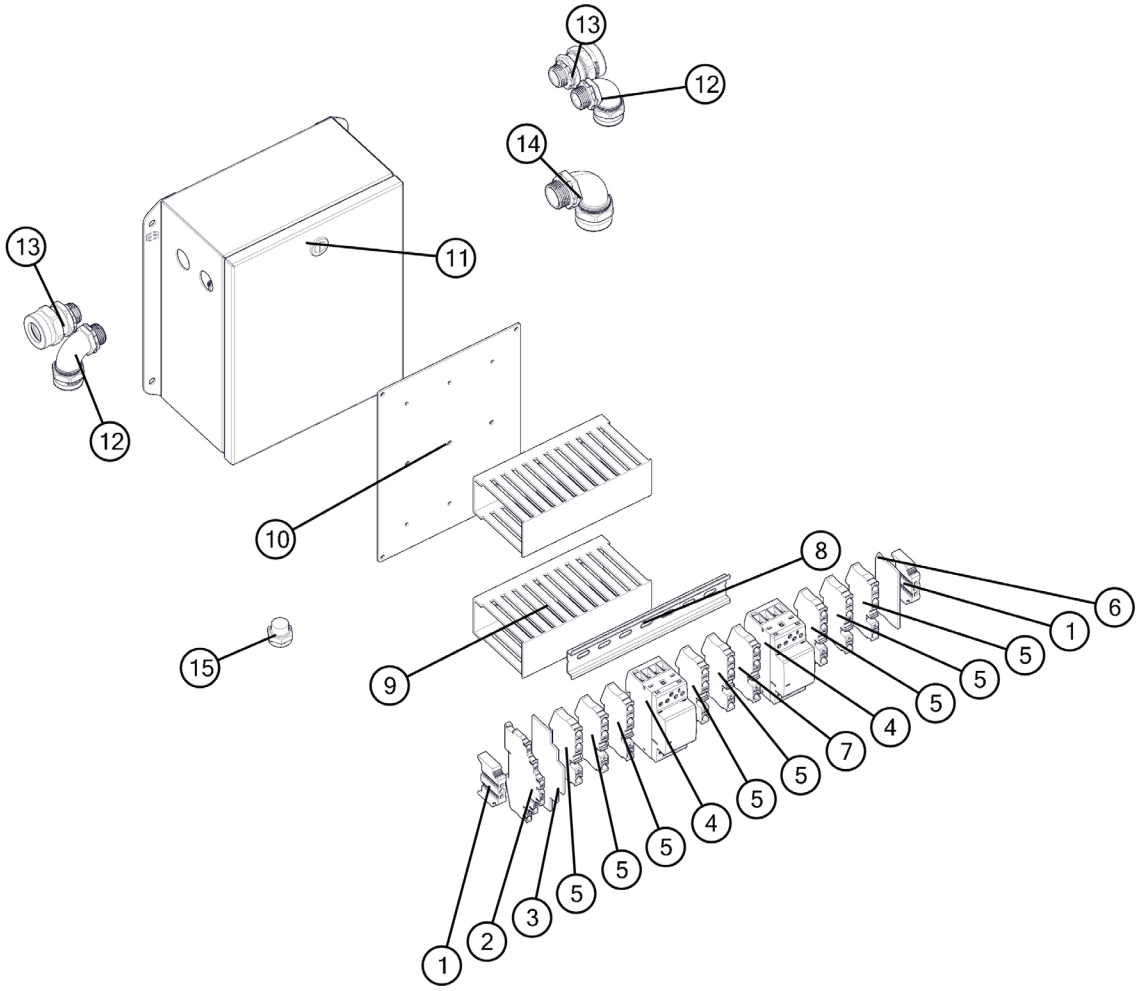

Please Check Serial Number Range. Important Changes between Control Box Versions
If you do not know the differences Please Contact Mauldin Technical Support

BOM ID	PART NUMBER	PART NAME	Qty
1	020-1004	END CLAMP DIN RAIL	2
2	020-1000	TERMINAL BLOCK DIN RAIL GROUND	1
3	020-0999	END COVER	1
4	020-1023	CONTACTOR 25 AMP 480VAC 4-POLE 12VDC CONTROL	2
5	020-1002	TERMINAL FEED-THROUGH DIN RAIL	8
6	020-1081	END PLATE	1
7	020-1303	Ground modular terminal block	1
8	020-209302	DIN RAIL 1560 HEAT BOX	1
9	020-209303	DUCT WIRING	2
10	020-209301	SCREED HEAT PANEL	1
11	020-209300	HEAT CONTACTOR ENCLOSURE	1
12	020-0764	CORD GRIP, 90 DEG, 1/2” CONDUIT	2
13	020-0763	1/2” CONDUIT CORD GRIP, STRAIGHT	2
14	020-0766	CORD GRIP, 90 DEG, 3/4” CONDUIT	1
15	020-1102	VENT ENCLOSURE PLUG	1

14 Upper Auger Assembly

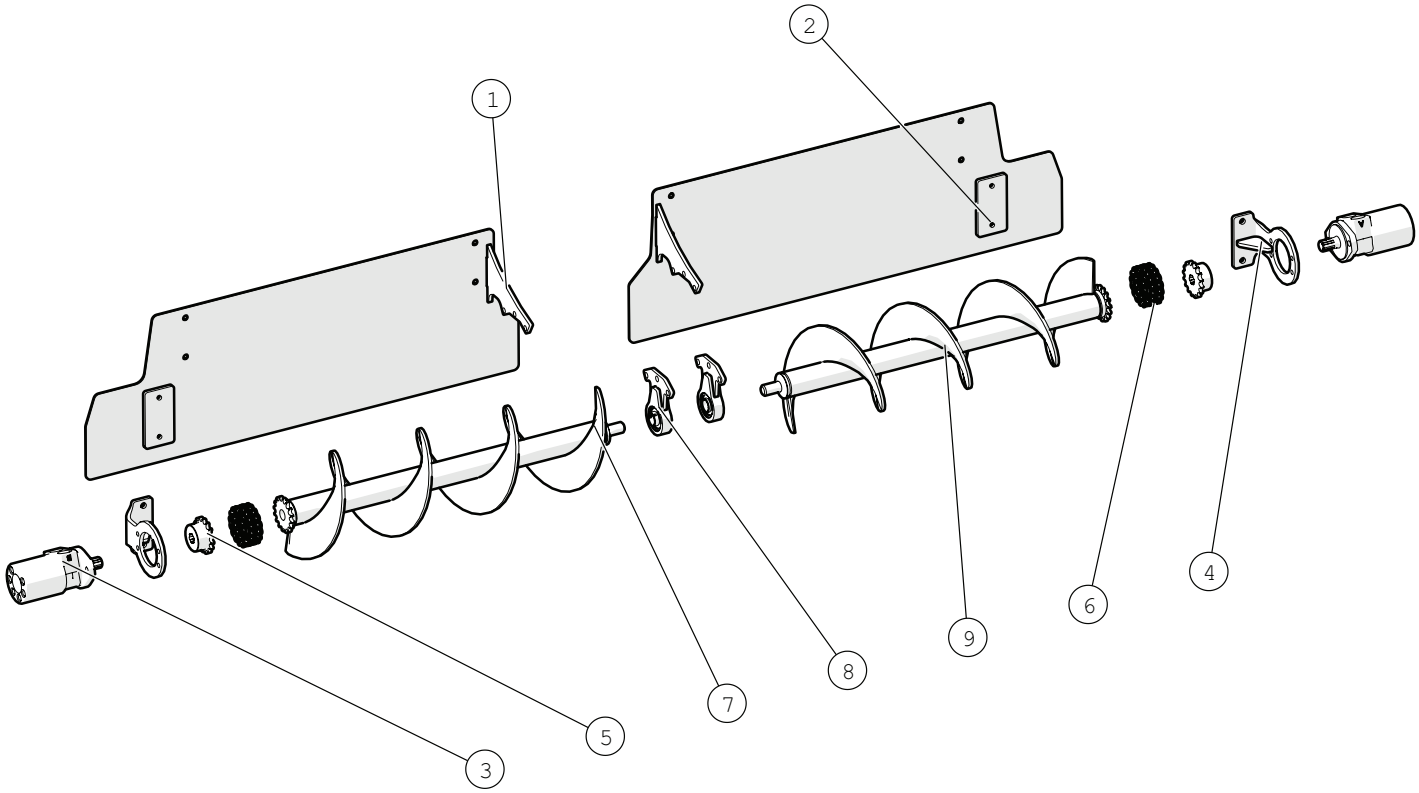

Upper Auger Assembly

BOM ID	PART NUMBER	DESCRIPTION	Qty
1	112-200502	WELDEMENT UPPER AUGER RH	1
2	112-200503	WELDMENT UPPER AUGER LH	1
3	013-0096	MOTOR AUGER	2
4	112-200072	AUGER MOTOR BRACKET	2
5	015-0154	SPROCKET	2
6	015-0045	COUPLING CHAIN	2
7	112-200540	AUGER UPPER RH	1
8	112-302080	AUGER BEARING SUPPORT	2
9	112-200541	AUGER UPPER LH	1

15 Screed Extensions

15.1 Left Extension Assembly

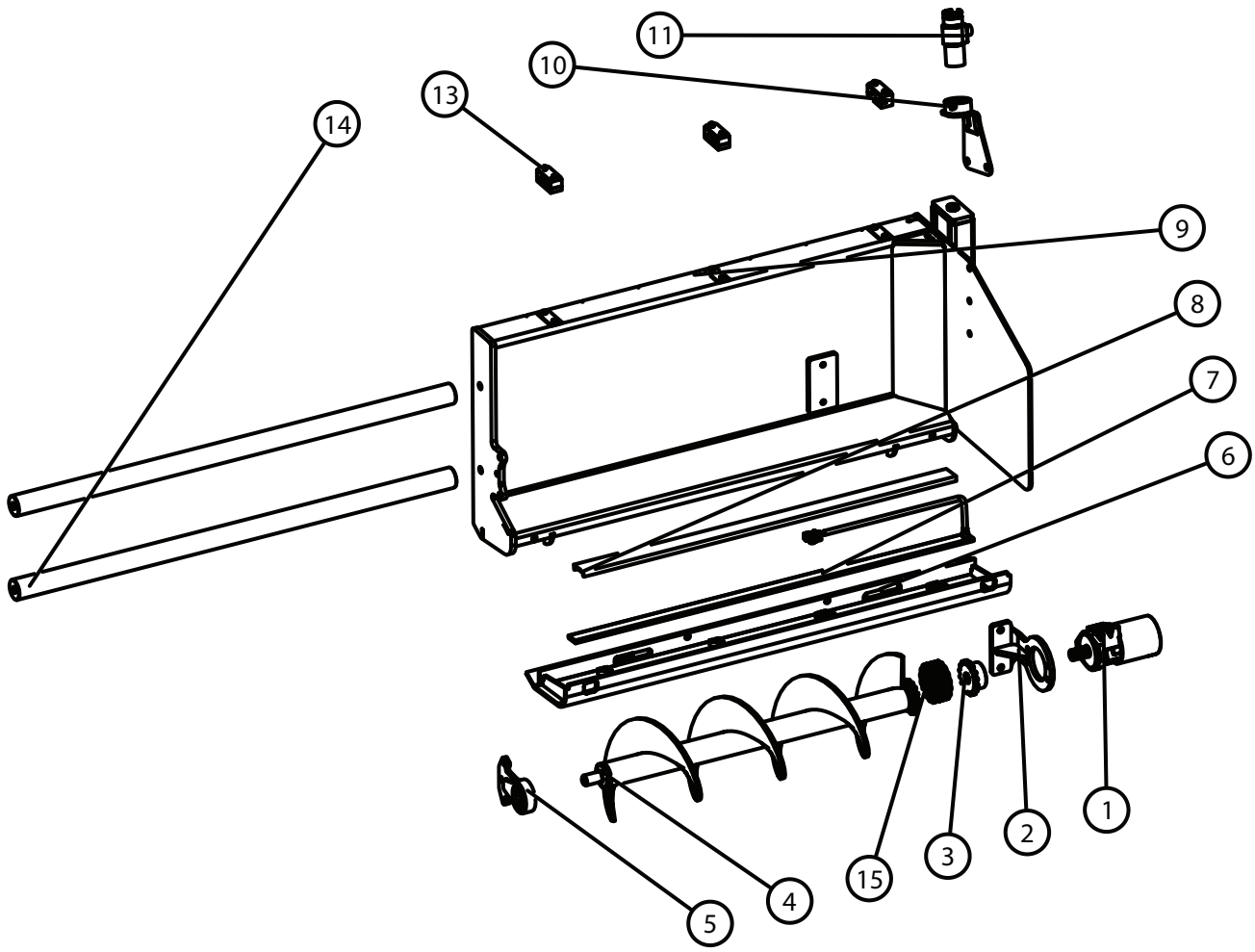

Left Extension Assembly

BOM ID	PART NUMBER	DESCRIPTION	Qty
1	013-0096	MOTOR AUGER	1
2	112-200072	MOUNT AUGER MOTOR	1
3	015-0154	AUGER DRIVE MOTOR CHAIN COUPLING	1
4	092-0014	AUGER WELDEMENT, LEFT	1
5	112-302080	SUPPORT AUGER BEARING	1
6	112-209330	EXTENSION BOTTOM WELDEMENT, ELECTRIC HEAT	1
7	020-0547-A	ELECTRIC HEAT ELEMENT	1
8	113-309290	HEAT ELEMENT RETAINER	1
9	112-209315	EXTENSION WELDEMENT, ELECTRIC HEAT, LEFT	1
10	112-200090	SONIC SENSOR MOUNT WELDEMENT, RIGHT	1
11	020-109473	AUGER SONIC SENSOR, LEFT	1
13	050-0415	3 HOSE CLAMP ASSEMBLY	3
14	113-209169	EXTENSION GUIDE ROD	2
15	015-0045	CHAIN COUPLING	1
16	050-0350	CABLE SONIC SENSOR	1

15.2 Right Extension Assembly

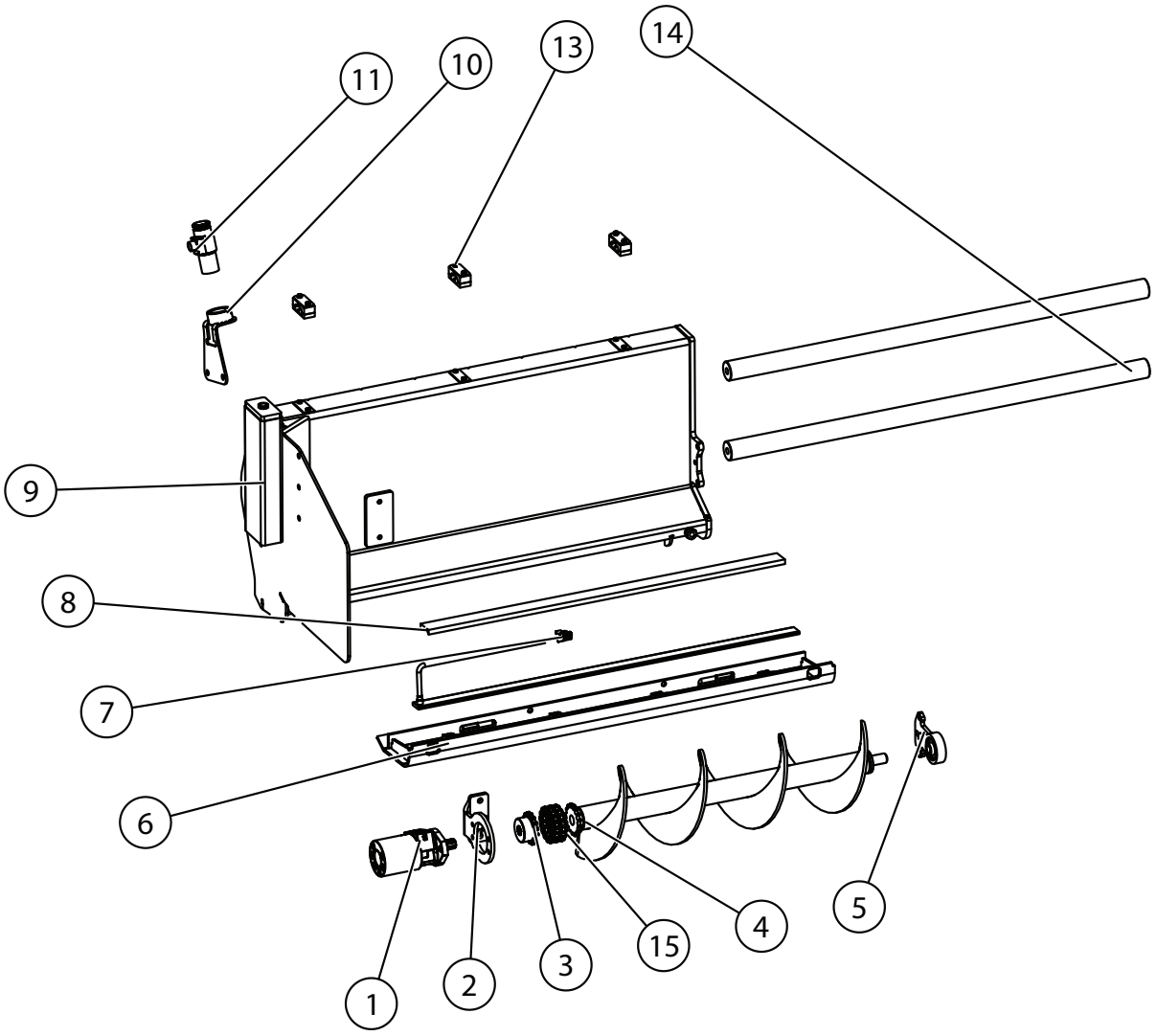

Right Extension Assembly

BOM ID	PART NUMBER	DESCRIPTION	Qty
1	013-0096	MOTOR AUGER	1
2	112-200072	MOUNT AUGER MOTOR	1
3	015-0154	AUGER DRIVE MOTOR CHAIN COUPLING	1
4	092-0013	AUGER WELDEMENT, RIGHT	1
5	112-302080	SUPPORT AUGER BEARING	1
6	112-209330	EXTENSION WEAR PLATE	1
7	020-0547-A	ELECTRIC HEAT ELEMENT	1
8	113-309290	HEAT STRIP RETAINER	1
9	112-209314	EXTENSION WELDEMENT, ELECTRIC HEAT, RIGHT	1
10	112-200090	SONIC SENSOR MOUNT WELDEMENT, RIGHT	1
11	020-109473	AUGER SONIC SENSOR, LEFT	1
13	050-0415	3 HOSE CLAMP ASSEMBLY	3
14	113-209169	EXTENSION GUIDE ROD	2
15	015-0045	CHAIN COUPLER	1
16	050-0350	CABLE SONIC SENSOR	1

15.3 Left Hand Endgate Assembly

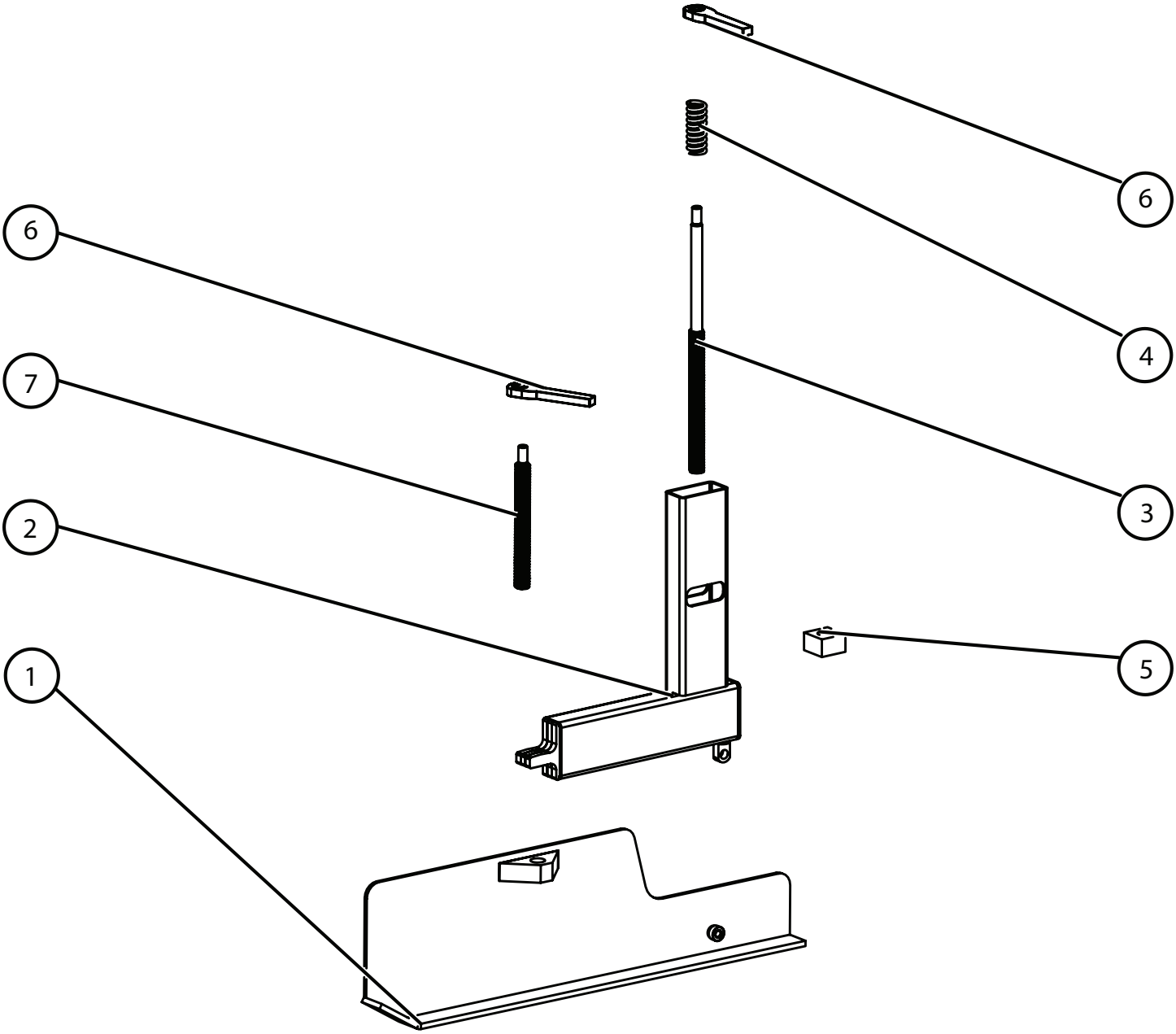

BOM ID	Part Number	Description	Quantity
1	112-209461	End Gate Shoe LH	1
2	112-209450	End Gate Lower Weldment	1
3	112-302376	Threaded Rod End Gate Height	1
4	050-0342	Spring	1
5	113-209462	End Gate Adjustment Nut	1
6	111-104170	Handle Ratcheting	2
7	113-209468	Threaded Rod End Gate Pivot	1
8 (Not Shown)	111-209451	Complete Assembly Endgate LH	1

15.4 Right Hand Endgate Assembly

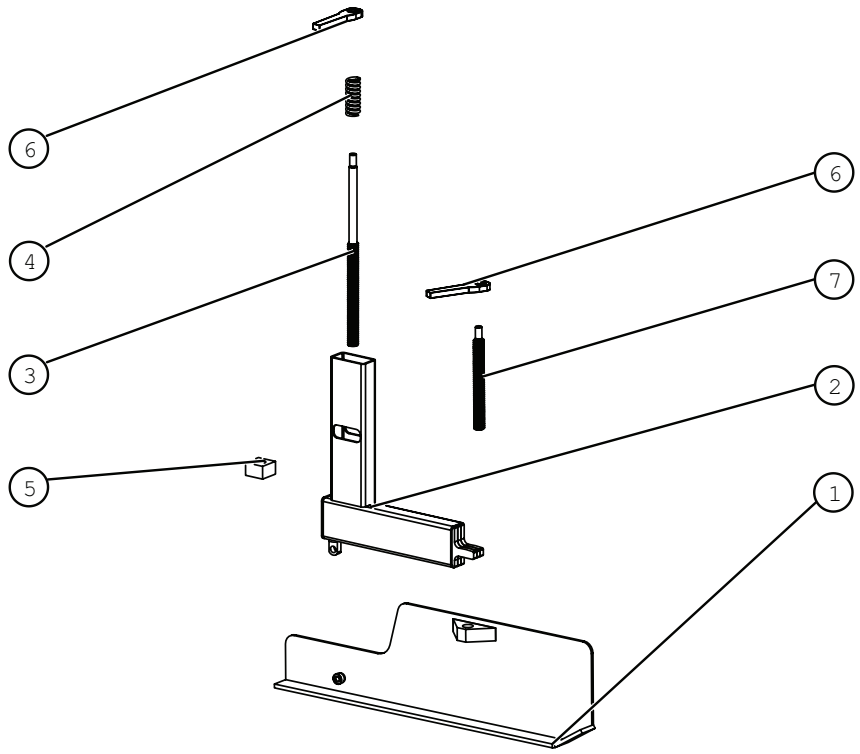

BOM ID	Part Number	Description	Quantity
1	112-209460	End Gate Shoe RH	1
2	112-209450	End Gate Lower Weldment	1
3	112-302376	Threaded Rod End Gate Height	1
4	050-0342	Spring	1
5	113-209462	End Gate Adjustment Nut	1
6	111-104170	Handle Ratcheting	2
7	113-209468	Threaded Rod End Gate Pivot	1
8 (Not Shown)	111-209450	Complete Assembly Endgate RH	1

15.5 Right Hand Heated Endgate Assembly

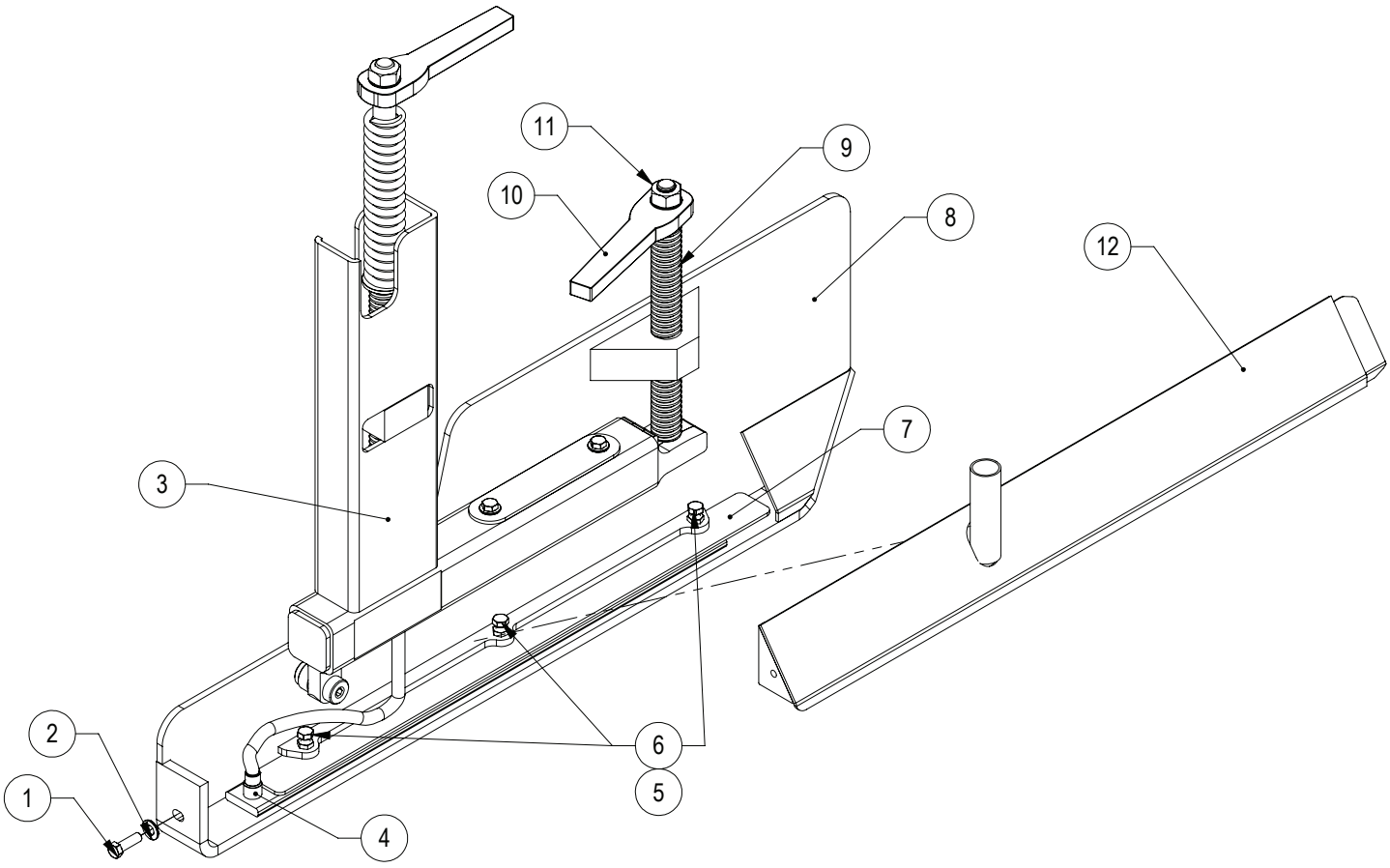

ITEM NO.	PART NUMBER	DESCRIPTION	QTY.
1	5/16” Bolt, 1” L	Bolt, Hex Head, Gr 8, 5/16-18, 1” Long, DiChromate Finish	1
2	5/16” Washer	Washer, Flat, SAE, 5/16”, DiChromate Finish	1
3	111-209350	SHOE HEIGHT CONTROL SUB-ASSEMBLY, RIGHT	1
4	020-1367	ENDGATE HEATING ELEMENT	1
5	5/8”-18 Jam Nut	Hex Jam Nut, 5/8”-18, DiChromate Finish	3
6	5/16 Bolt, 3/4” lg	Bolt, Hex Head, Gr 8, 5/16-18, 3/4”, DiChromate finish	3
7	113-309394	11 GA. HR, P&O STEEL PLATE	1
8	112-209970	END GATE SHOE WELDMENT, RIGHT	1
9	113-209468	1” - 5 ACME Threaded Rod	1
10	111-104170	RACHET HANDLE, SMALL	1
11	5/8-18 Hex Nut	Nut, Hex, 5/8-18, Plain Finish	1
12	112-209962	SHOE HEAT STRIP COVER, RIGHT	1

15.6 Left Hand Heated Endgate Assembly

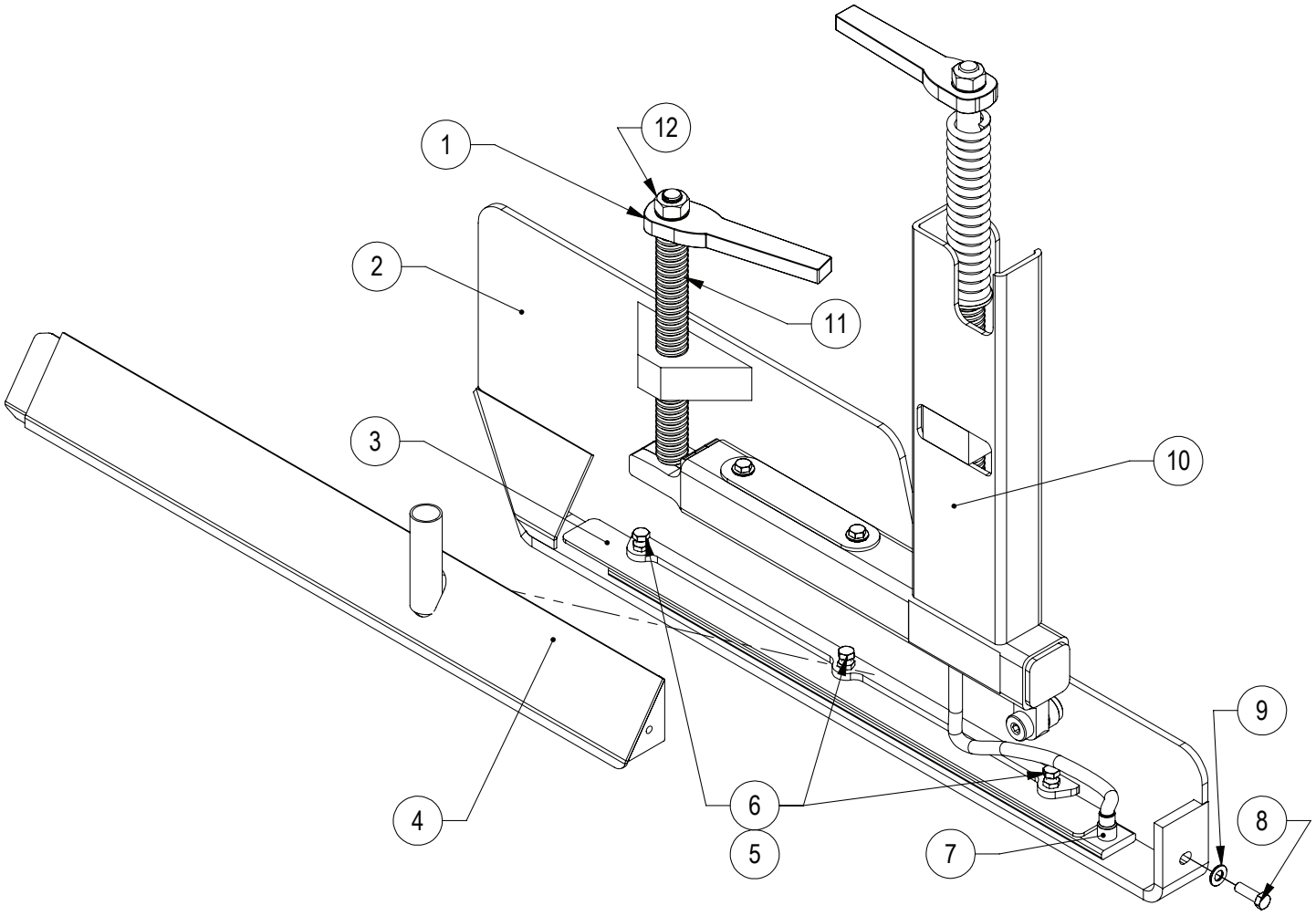

ITEM #	PART NUMBER	DESCRIPTION	QTY.
1	111-104170	RACHET HANDLE, SMALL	1
2	112-209971	END GATE SHOE WELDEMENT, LEFT	1
3	113-309394	11 GA. HR, P&O STEEL PLATE	1
4	112-209963	SHOE HEAT STRIP COVER, LEFT	1
5	5/8”-18 Jam Nut	Hex Jam Nut, 5/8”-18, DiChromate Finish	3
6	5/16 Bolt, 3/4” lg	Bolt, Hex Head, Gr 8, 5/16-18, 3/4”, DiChromate finish	3
7	020-1367	ENDGATE HEATING ELEMENT	1
8	5/16” Bolt, 1” L	Bolt, Hex Head, Gr 8, 5/16-18, 1” Long, DiChromate Finish	1
9	5/16” Washer	Washer, Flat, SAE, 5/16”, DiChromate Finish	1
10	111-209351	SHOE HEIGHT CONTROL SUB-ASSEMBLY, LEFT	1
11	113-209468	1” - 5 ACME Threaded Rod	1
12	5/8-18 Hex Nut	Nut, Hex, 5/8-18, Plain Finish	1

15.7 End Gate Vertical Assembly

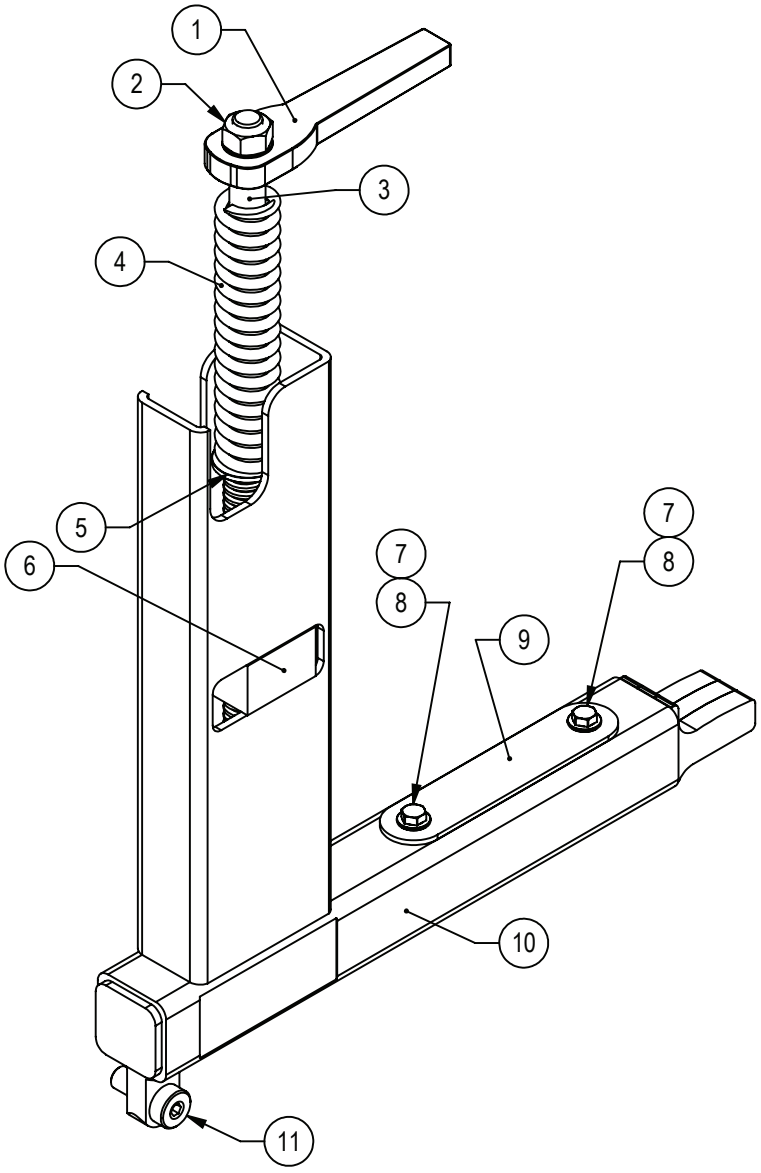

Right End Gate Assembly

ITEM NO	PART NUMBER	DESCRIPTION	QTY.
1	111-104170	RACHET HANDLE, SMALL	1
2	5/8-18 Hex Nut	Nut, Hex, 5/8-18, DiChromate Finish	1
3	112-302376	SHOE HEIGHT ADJUSTING THREADED ROD	1
4	050-0431	End Gate Shoe Tension Spring	1
5	3/4” SAE Washer	Washer, Flat, SAE, 3/4”, DiChromate Coated	1
6	113-209462	1.25” x 2.00” CR STEEL FLAT BAR	1
7	5/16” Washer	Washer, Flat, SAE, 5/16”, DiChromate Finish	2
8	5/16 Bolt, 3/4” lg	Bolt, Hex Head, Gr 8, 5/16-18, 3/4”, DiChromate finish	2
9	113-309358	11 GA. HR, P&O STEEL PLATE	1
10	112-209350	EXTENSION SHOE MOUNT	1
11	1/2-13 Shldr Bolt	Shoulder Bolt, 1/2”-13, 5/8” Long	1

15.8 End Gate Assemblies (SN 017-Y and newer)

15.8.1 Right Hand End Gate Assembly

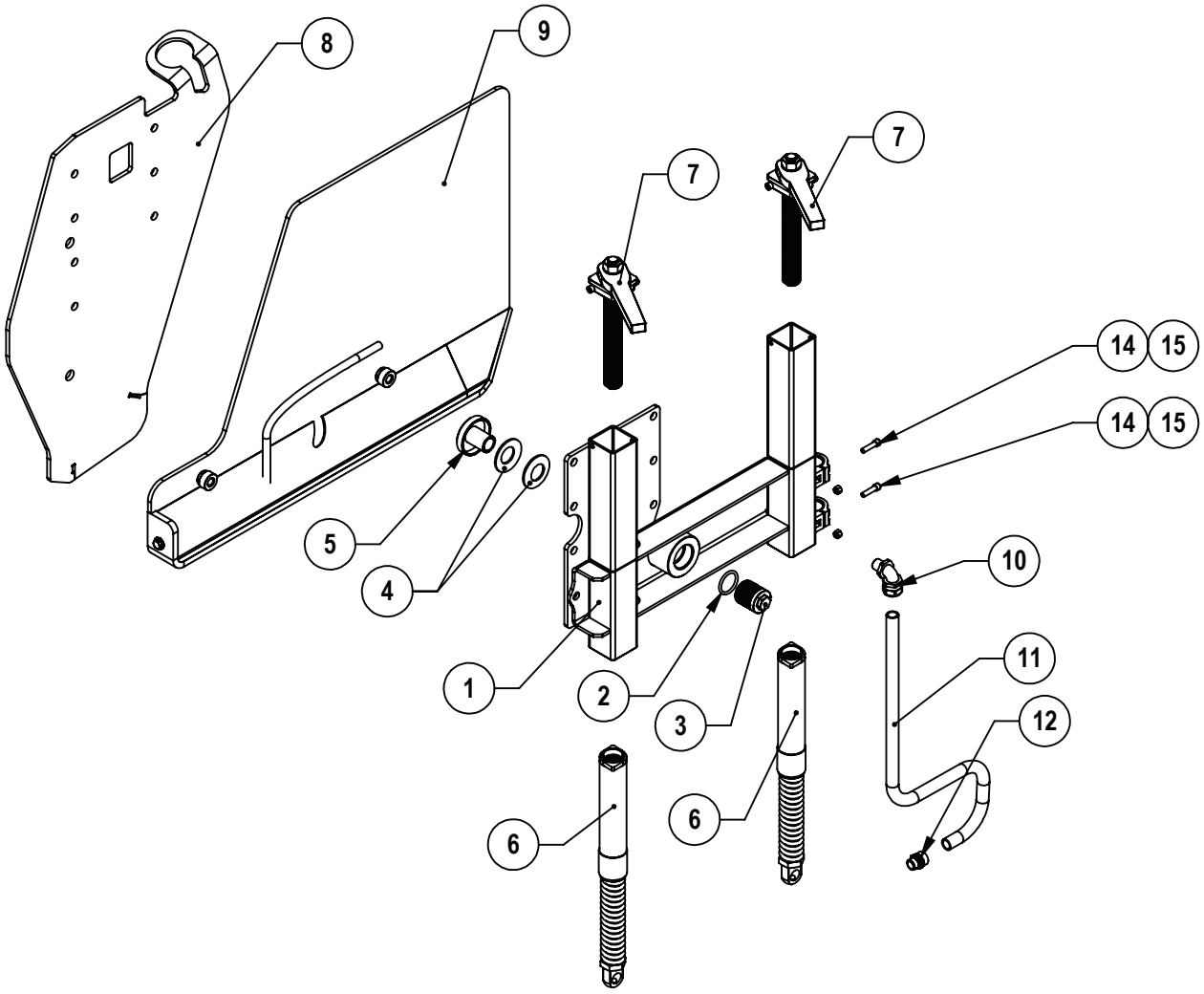

ITEM NO.	PART NUMBER	QTY.	DESCRIPTION
1	112-209910	1	EXTENSION ENDGATE SUPPORT WELDMENT RIGHT
2	217 O-Ring	1	O-RING
3	113-209934	1	BOLT EXT ENDGATE TENSION
4	030-0450	2	BELLEVILLE DISC SPRING
5	113-209932	1	BOSS ENDGATE TENSION
6	111-209920	2	EXTENSION SHOE ADJUSTING ROD ASSEMBLY
7	111-209914	2	END GATE ADJUSTING HANDLE ASSEMBLY
9	111-209940	1	EXTENSION END GATE, HEATED, RIGHT
10	020-1485	1	ELECTRICAL CONDUIT CONNECTOR, 90 ELBOW
11	014-209950	1	FLEXIBLE CONDUIT
12	020-1486	1	ELECTRICAL CONDUIT CONNECTOR, STRAIGHT
14	CAP SCREW	2	Socket Head Cap Screw 1/4-20 x 1.00
15	1/4”-20 Nut	2	Nut, Hex, Nylon Lock, 1/4”-20, DiChromate Finish

15.8.2 Left Hand End Gate Assembly

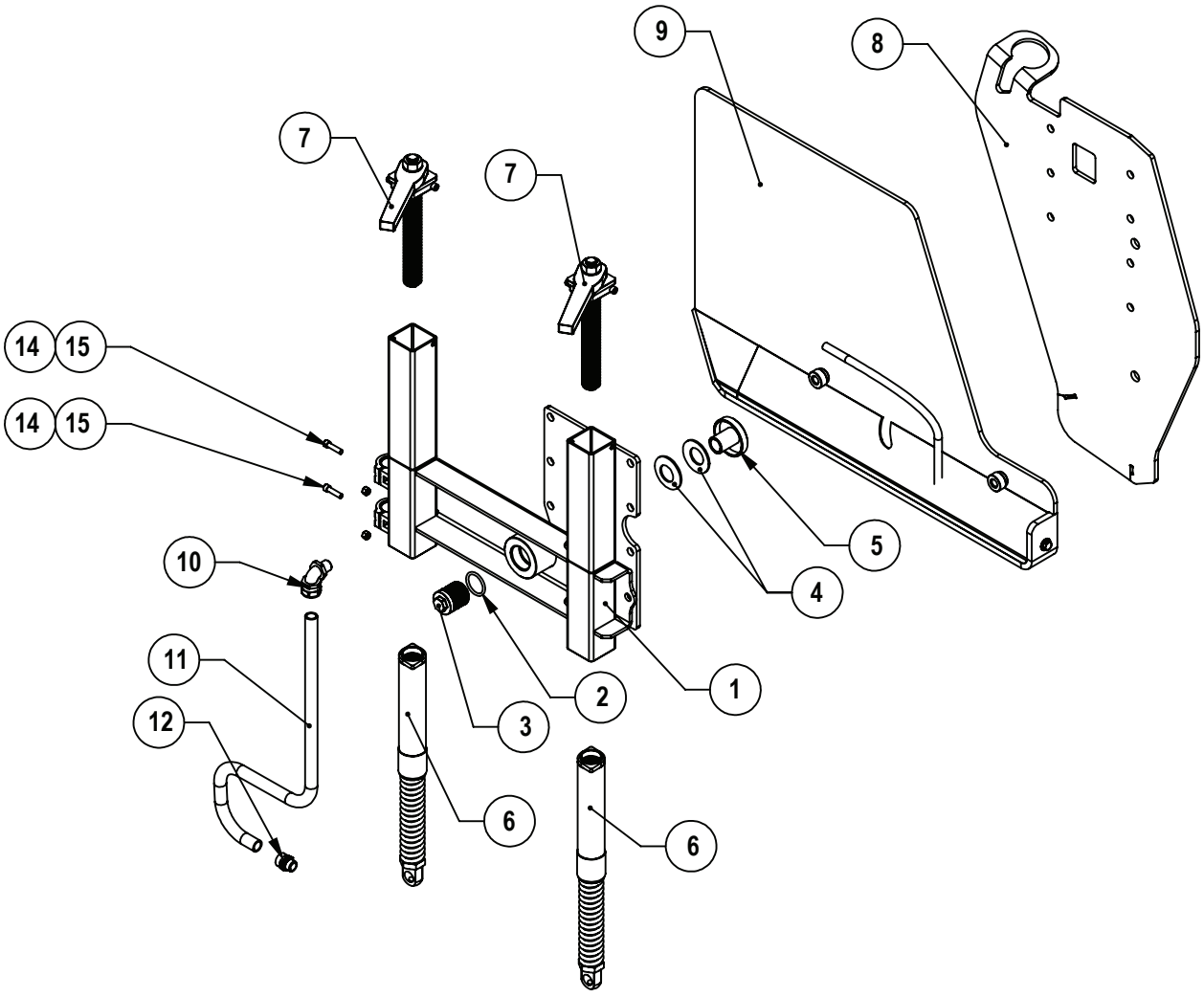

ITEM NO.	PART NUMBER	QTY.	DESCRIPTION
1	112-209911	1	EXTENSION ENDGATE SUPPORT WELDMENT LEFT
2	217 O-Ring	1	O-RING
3	113-209934	1	BOLT EXT ENDGATE TENSION
4	030-0450	2	BELLEVILLE DISC SPRING
5	113-209932	1	BOSS ENDGATE TENSION
6	111-209920	2	EXTENSION SHOE ADJUSTING ROD ASSEMBLY
7	111-209914	2	END GATE ADJUSTING HANDLE ASSEMBLY
9	111-209941	1	EXTENSION END GATE, HEATED, RIGHT
10	020-1485	1	ELECTRICAL CONDUIT CONNECTOR, 90 ELBOW
11	014-209950	1	FLEXIBLE CONDUIT
12	020-1486	1	ELECTRICAL CONDUIT CONNECTOR, STRAIGHT
14	CAP SCREW	2	Socket Head Cap Screw 1/4-20 x 1.00
15	1/4”-20 Nut	2	Nut, Hex, Nylon Lock, 1/4”-20, DiChromate Finish

15.8.3 Endgate Tension Spring Assembly

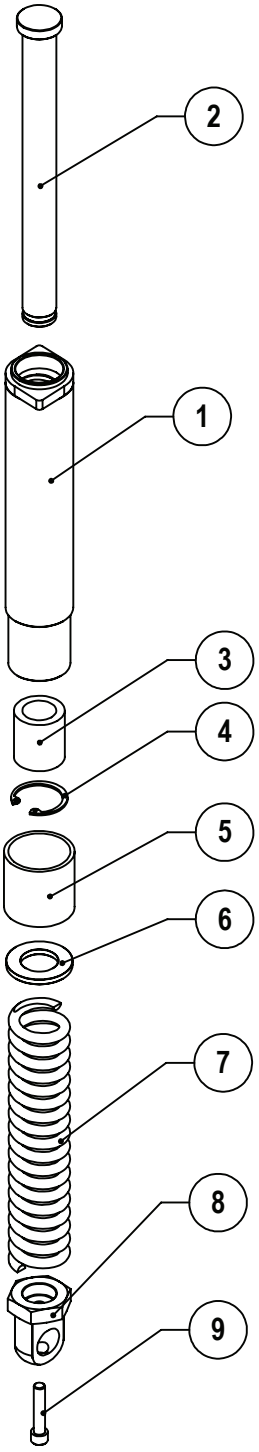

ITEM NO.	PART NUMBER	QTY.	DESCRIPTION
1	112-209920	1	ADJUSTING ROD UPPER TUBE WELDMENT
2	113-209924	1	ROD GUIDE ADJUSTING HANDLE SPRING
3	018-0137	1	BRONZE BEARING
4	030-0593	1	INTERNAL RETAINING RING
5	018-0138	1	BRONZE BEARING
6	3/4” Wash-er	1	Washer, Flat, SAE, 3/4”, DiChromate Coated
7	050-0431	1	End Gate Shoe Tension Spring
8	113-209926	1	1.250” CR 1018 STEEL HEX BAR
9	CAP SCREW	1	Socket Head Cap Screw 1/4-20 x 1.25

15.8.4 End Gate Adjustment Handle Assembly

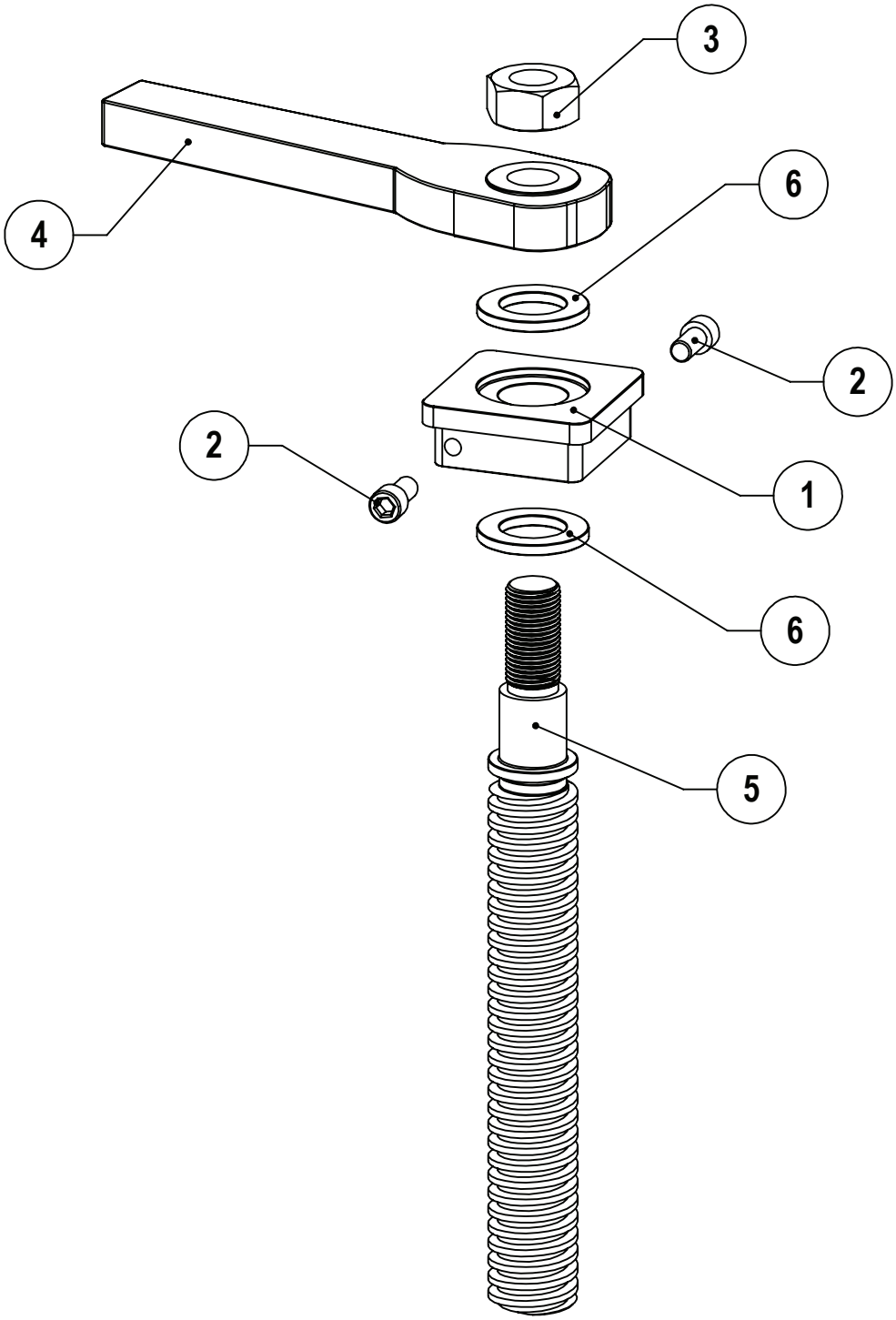

ITEM NO.	PART NUMBER	QTY.	DESCRIPTION
1	113-209914	1	BASE ENDGATE ADJUSTING HANDLE
2	CAP SCREW	2	Socket Head Cap Screw 1/4-20 x 0.50
3	5/8-18 Hex Nut	1	Nut, Hex, 5/8-18, DiChromate Finish
4	111-104170	1	RACHET HANDLE, SMALL
5	113-209918	1	SCREW EXT SHOW HEIGHT ADJ
6	018-0121	2	BRONZE BEARING

16 Optional Equipment

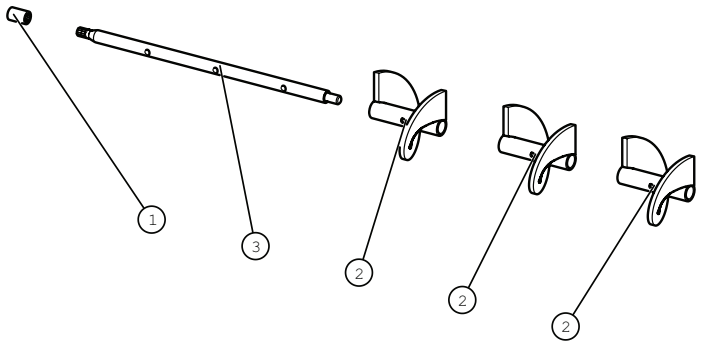

16.1 Optional Equipment

BOM ID	PART NUMBER	DESCRIPTION	Qty
	015-0288A	COMPLETE RIGHT HEAVY DUTY AUGER ASSEMBLY	
	015-0289A	COMPLETE LEFT HEAVY DUTY AUGER ASSEMBLY	
1	112-302582	1”-6 TOOTH SPLINE BUSHING	1
2	015-0289	HEAVY DUTY AUGER FLIGHT SINGLE SECTION LEFT AUGER	3
2.1 (Not Shown)	015-0288	HEAVY DUTY AUGER FLIGHT SINGLE SECTION RIGHT AUGER	3
3	113-302580	AUGER FLIGHT MOUNTING SHAFT	1

Schematics

17.1 Electrical Schematic Serial# 427 - 602

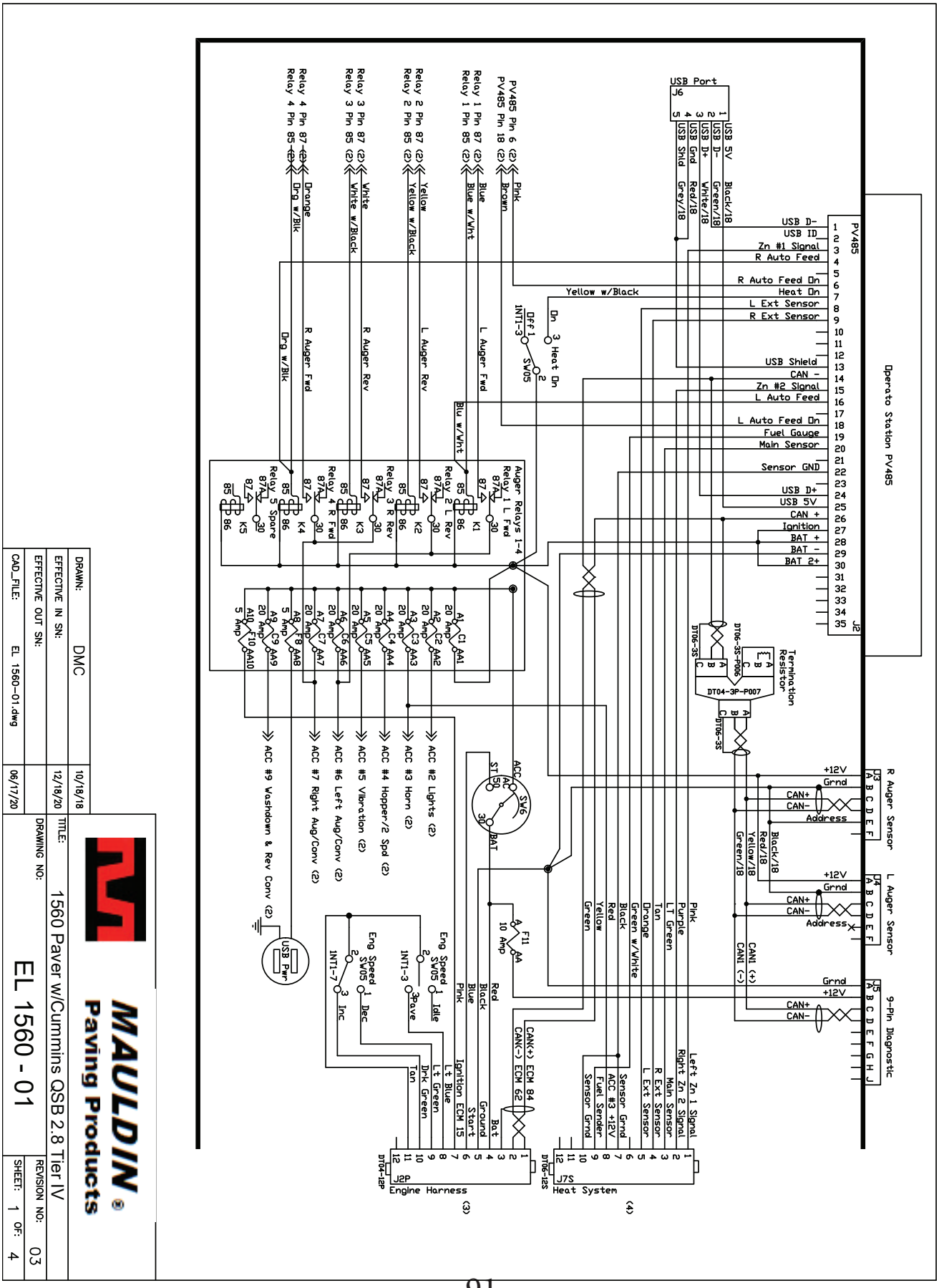

DRAWN: DMC	10/18/18	
EFFECTIVE IN SN:	12/18/20	
EFFECTIVE OUT SN:		
CAD_FILE: EL 1560-01.dwg	06/17/20	

MAULDIN® Paving Products

TITLE: 1560 Paver w/Cummins QSB 2.8 Tier IV

DRAWING NO: EL 1560 - 01

REVISION NO: 03

SHEET: 1 OF: 4

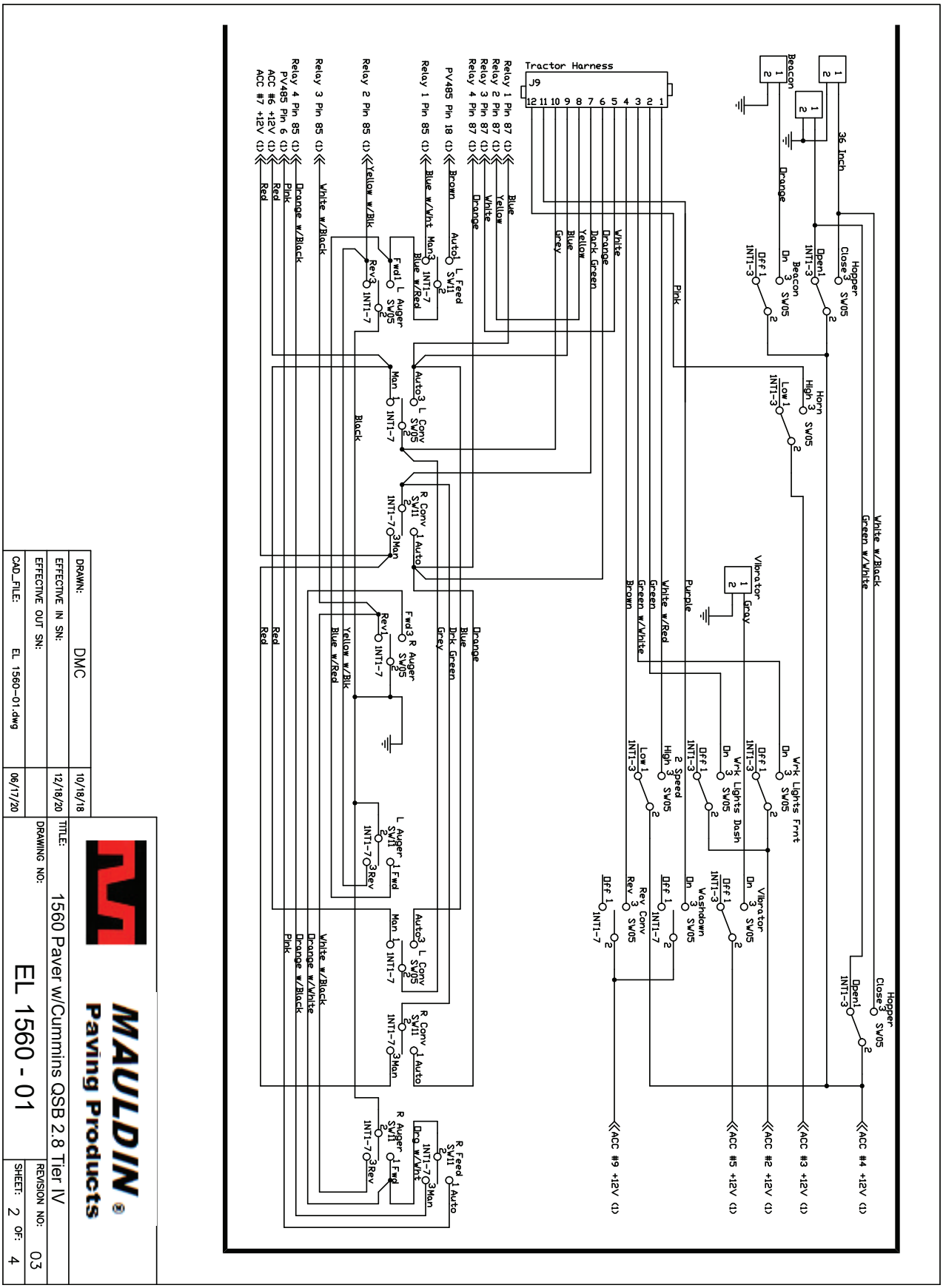

Please check serial number range to determine you are using the correct electrical schematic. Failure to do so could result in injury or death.

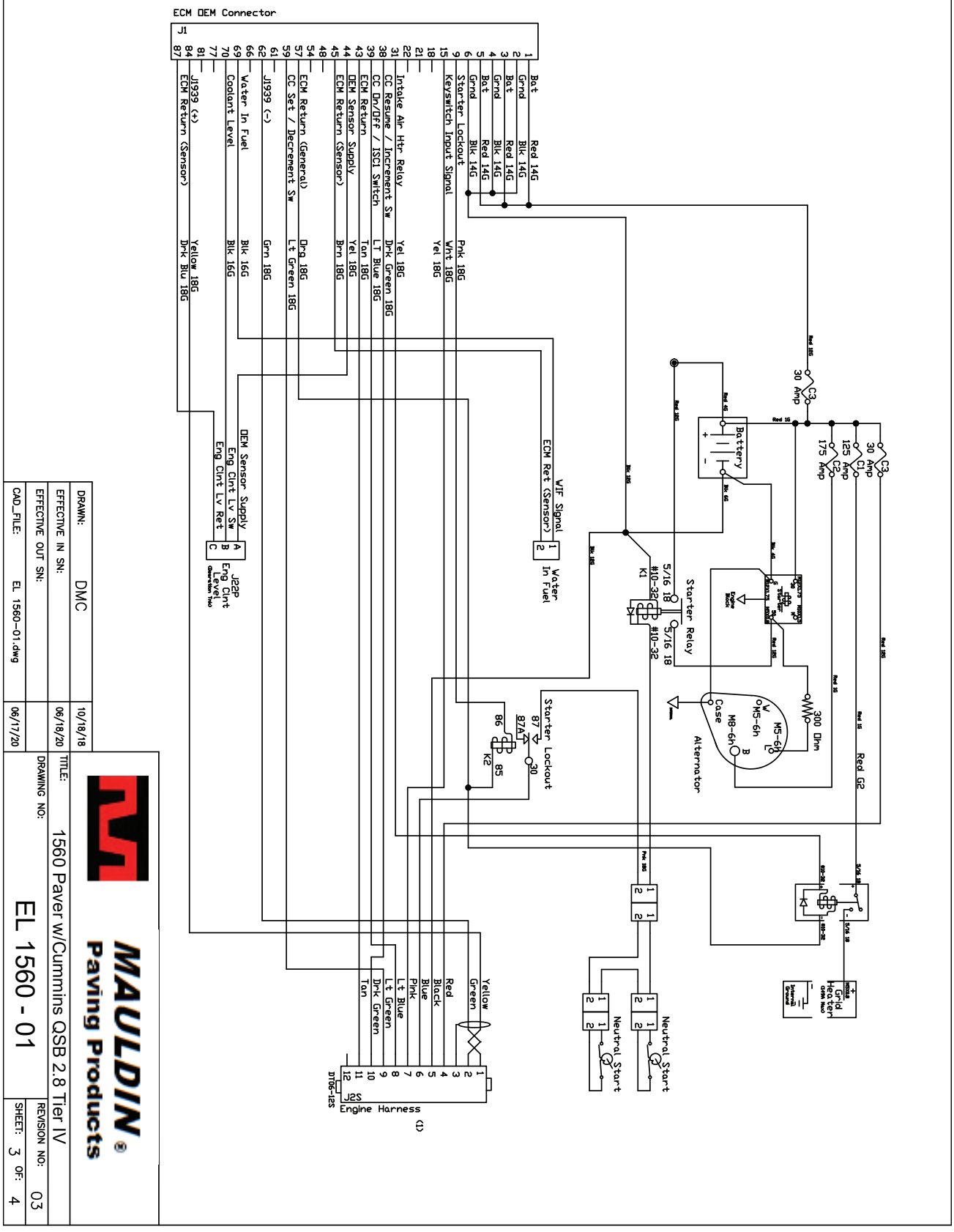

Please check serial number range to determine you are using the correct electrical schematic. Failure to do so could result in injury or death.

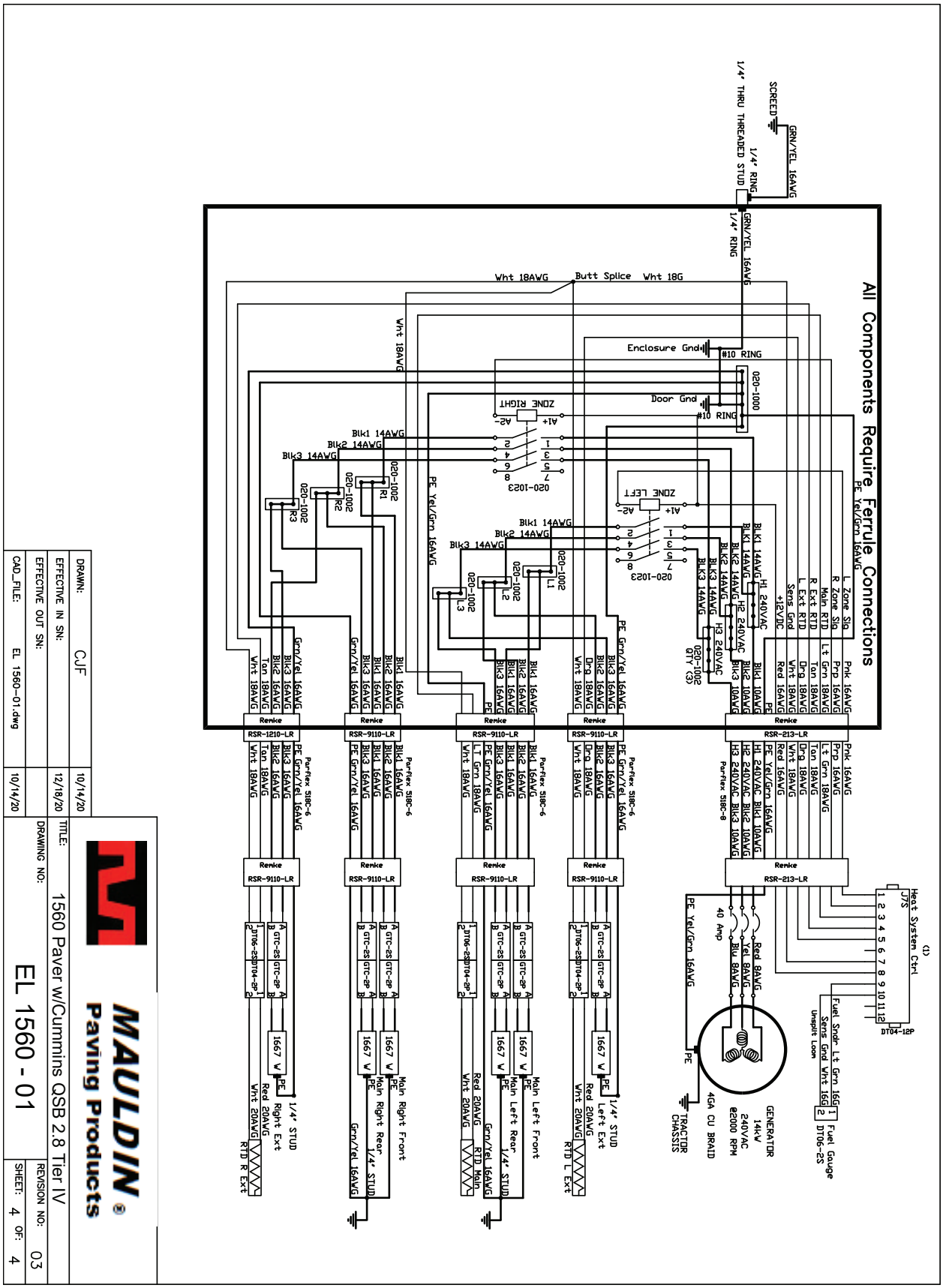

Please check serial number range to determine you are using the correct electrical schematic. Failure to do so could result in injury or death.

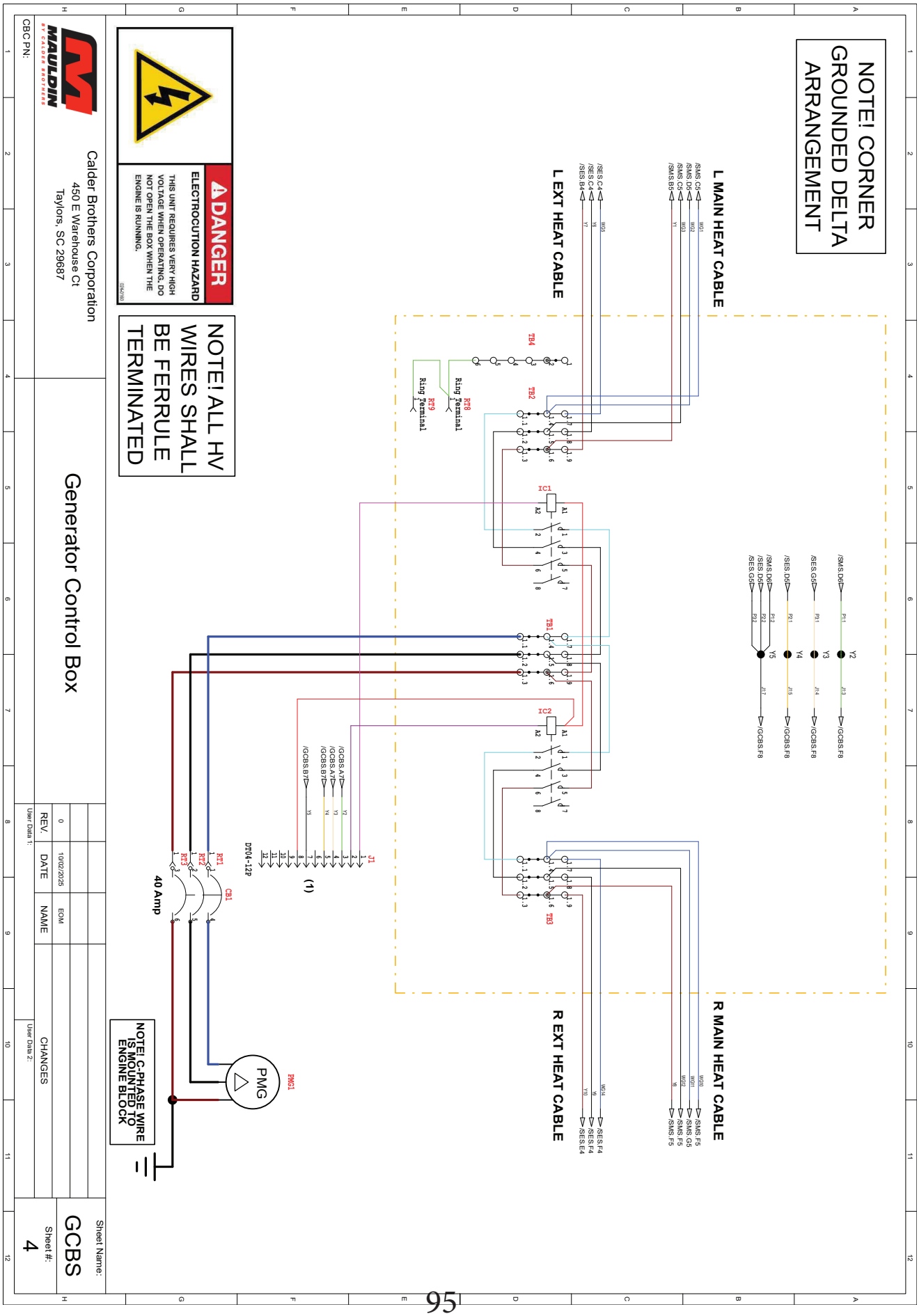
NOTE! CORNER GROUNDED DELTA ARRANGEMENT
L MAIN HEAT CABLE
L EXT HEAT CABLE
R MAIN HEAT CABLE
R EXT HEAT CABLE
NOTE! ALL HV WIRES SHALL BE FERRULE TERMINATED
DANGER
ELECTROCUTION HAZARD
THIS UNIT REQUIRES VERY HIGH VOLTAGE WHEN OPERATING. DO NOT OPEN THE BOX WHEN THE ENGINE IS RUNNING.
Calder Brothers Corporation
450 E Warehouse Ct
Taylors, SC 29687
Generator Control Box
CBC PN:
REV.
DATE
NAME
CHANGES
User Data 1:
User Data 2:
Sheet Name:
GCBS
Sheet #:
4
40 Amp
PMG
NOTE! C-PHASE WIRE IS MOUNTED TO ENGINE BLOCK
DT04-12P
Ring Terminal

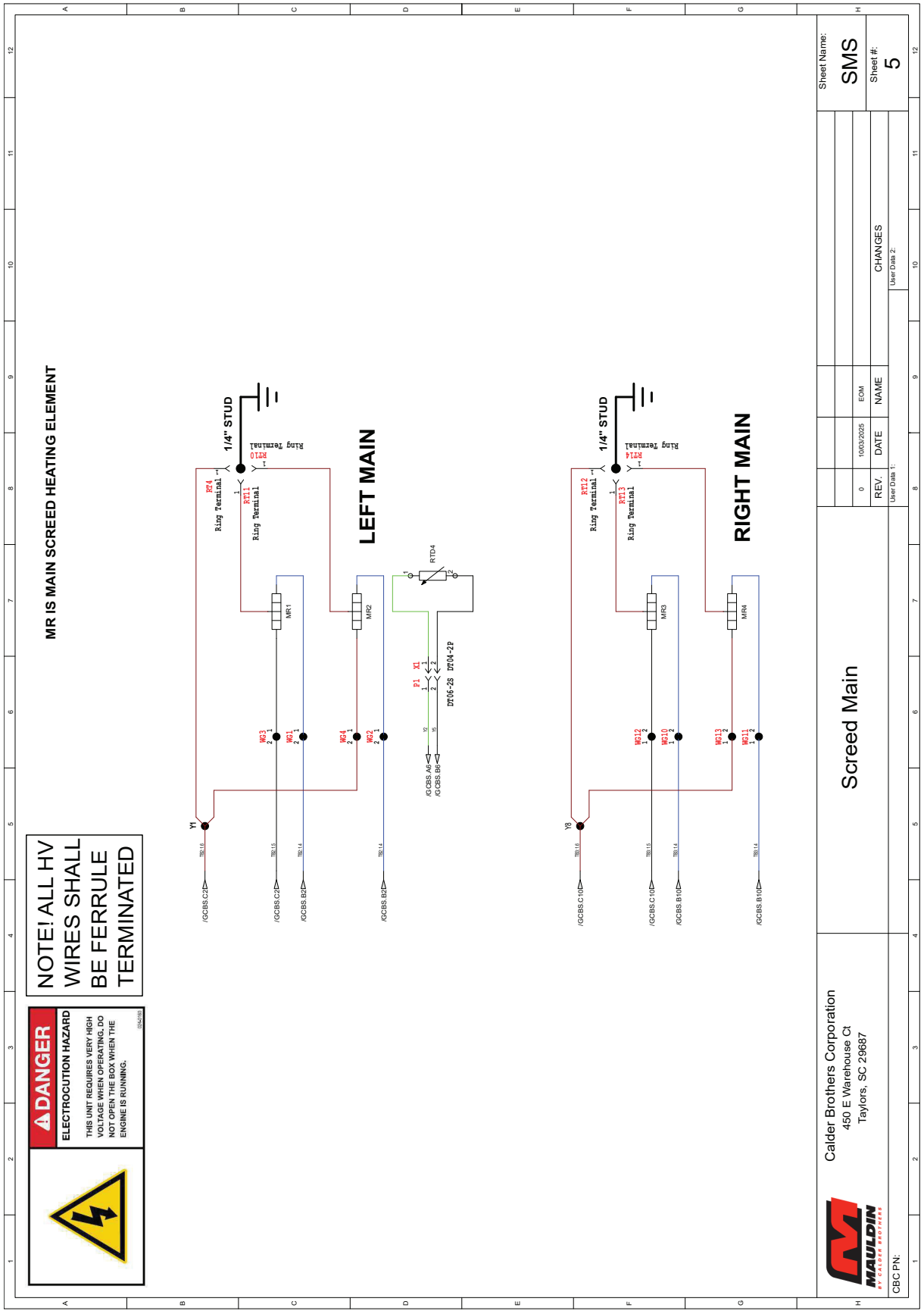
MR IS MAIN SCREED HEATING ELEMENT
NOTE! ALL HV WIRES SHALL BE FERRULE TERMINATED
DANGER
ELECTROCUTION HAZARD
THIS UNIT REQUIRES VERY HIGH VOLTAGE WHEN OPERATING, DO NOT OPEN THE BOX WHEN THE ENGINE IS RUNNING.
LEFT MAIN
RIGHT MAIN
1/4" STUD
Ring Terminal
RT4
RT11
RT12
RT13
RT14
MR1
MR2
MR3
MR4
RTD4
DT06-2S
DT04-2P
Screed Main
Calder Brothers Corporation
450 E Warehouse Ct
Taylors, SC 29687
MAULDIN
CBC P/N:
REV.
DATE
NAME
CHANGES
EOM
10/03/2025
Sheet Name:
SMS
Sheet #:
5

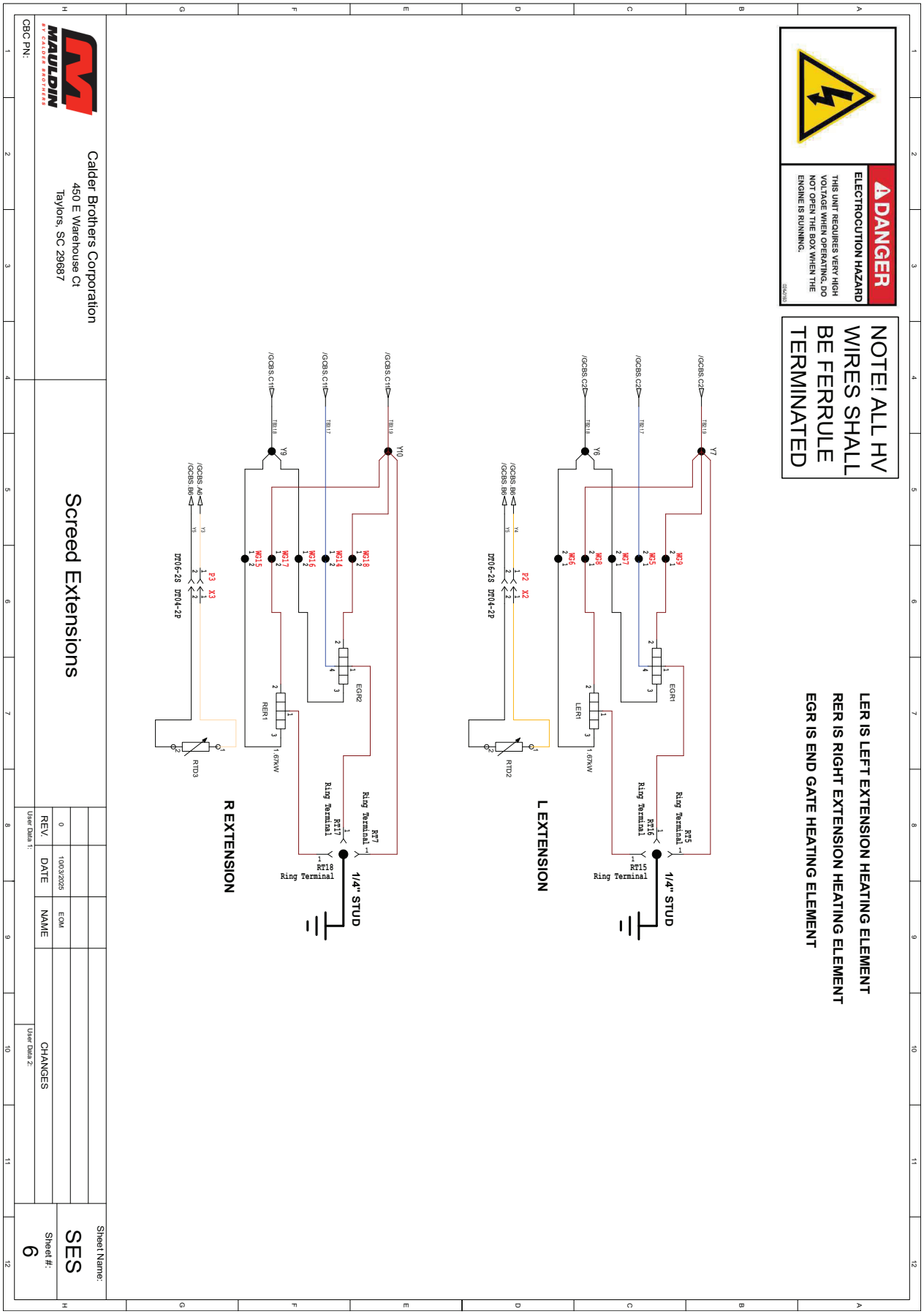
DANGER
ELECTROCUTION HAZARD
THIS UNIT REQUIRES VERY HIGH VOLTAGE WHEN OPERATING. DO NOT OPEN THE BOX WHEN THE ENGINE IS RUNNING.
NOTE! ALL HV WIRES SHALL BE FERRULE TERMINATED
LER IS LEFT EXTENSION HEATING ELEMENT
RER IS RIGHT EXTENSION HEATING ELEMENT
EGR IS END GATE HEATING ELEMENT
L EXTENSION
R EXTENSION
1/4" STUD
Ring Terminal
DT06-2S
DT04-2P
EGR1
EGR2
LER1
RER1
RTD2
RTD3
1.67KW
Calder Brothers Corporation
450 E Warehouse Ct
Taylors, SC 29687
Screed Extensions
CBC PN:
REV.
DATE
NAME
CHANGES
User Data 1:
User Data 2:
Sheet Name:
SES
Sheet #:
6

17.2 Hydraulic Schematics

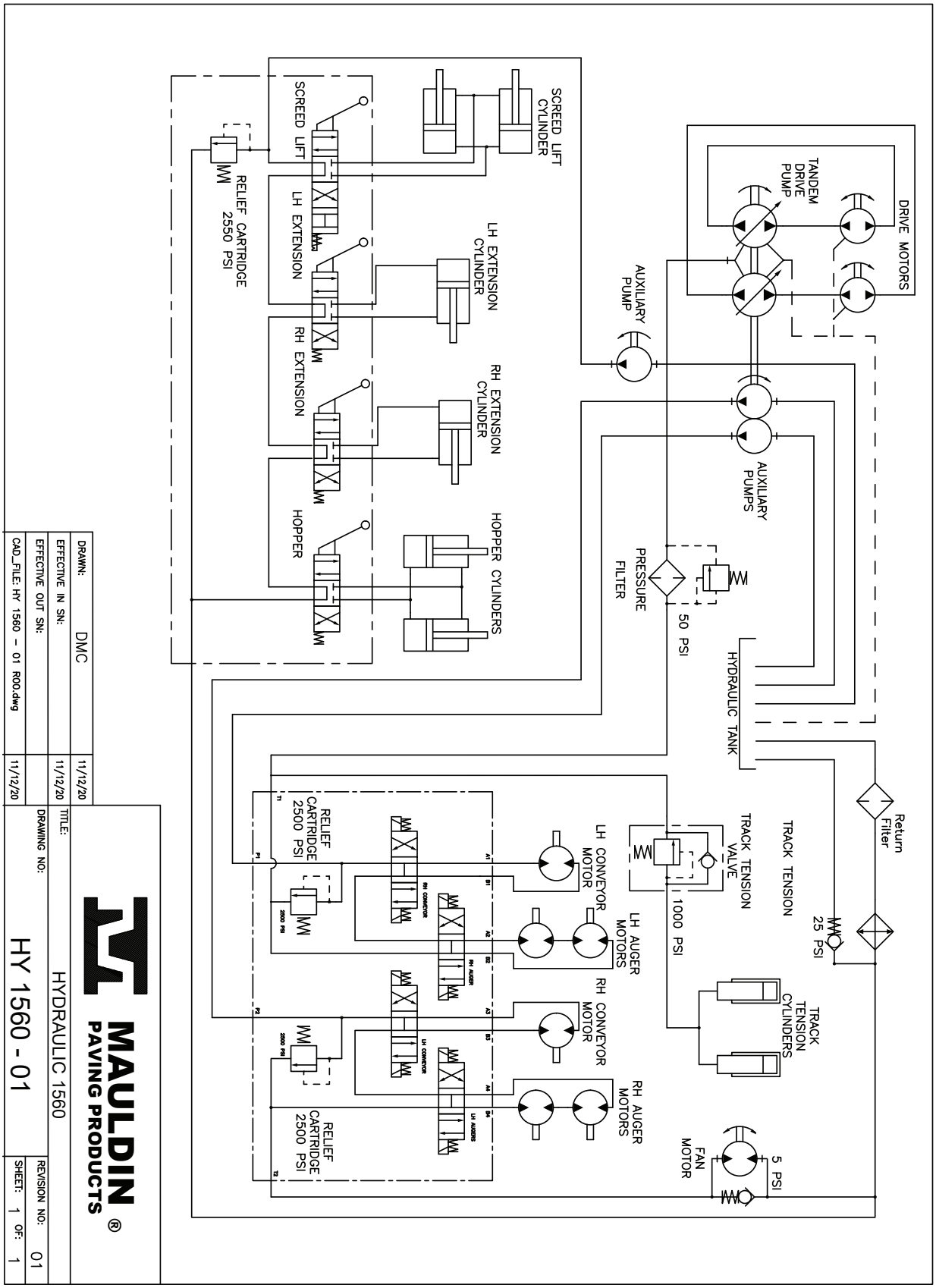

MAULDIN
PAVING PRODUCTS

CALDER BROTHERS CORPORATION

(LIMITED) PRODUCT WARRANTY

Calder Brothers Corporation warrants that the Paver, Roller, Tank or Grader under this program will be free from defects in material and workmanship for a period of(12) twelve months from the date of installation. Written notice of any claimed defect must be given to Calder Brothers Corporation within the warranty period and within (30) thirty days after such defect is discovered. Liability under this warranty is limited to replacing or repairing at Calder Brothers Corporation election, any part or parts deemed defective after examination by Calder Brothers Corporation or an Authorized Service Representative via prepaid transportation for which is found to be defective, will be repaired or replaced and returned to the customer via prepaid surface transportation within the United States. Should any part be found not defective, inspection and handling may be charged to the customer by Mauldin or an Authorized Service Representative.

EXCLUSIONS:
This warranty does not apply to routine wearable parts of the Mauldin machine such as seals, points, plugs, hoses or similar items. This warranty does not extend to any machine or part replaced or repaired under this warranty. This warranty does not cover any repair or replacement labor or any part of parts found defective after examination by Mauldin or an Authorized Service Representative. This warranty does not apply to defects caused by casualty or unreasonable use, including faulty repairs by others and failure to provide reasonable and necessary maintenance.

THIS WARRANTY SET FORTH HEREIN IS IN LIEU OF AND EXCLUDES ANY AND ALL OTHER WARRANTIES, EXPRESSED OR IMPLIED, ARISING BY OPERATION OF LAW OR OTHERWISE, INCLUDING, BUT NOT LIMITED TO, ANY IMPLIED WARRANTY OF MERCHANTABILITY OR FITNESS FOR A PARTICULAR PURPOSE, AND CUSTOMER WAIVES ANY OBLIGATION OF LIABILTY OF MAULDIN ARISING IN TORT OR STRICT LIABILITY IN TORT, OR FOR LOSS OR USE, REVENUE OR PROFIT WITH RESPECT TO MAULDIN MACHINE AND/OR PARTS FOR ANY LIABILTY OF CUSTOMER TO ANY THIRD PARTY, OR FOR OTHER DIRECT, INCIDENTAL OR CONSEQUENTIAL DAMAGES.

I have read and fully understand the warranty policy above.

_____ _____

Customer Witness

CALDER BROTHERS CORPORATION